© Heidelberg DTP 2001, © Kim The CD Man 2001

TRIUMPH

Trident

45 cu. ins. (750 c.c.)

REPLACEMENT PARTS CATALOGUE

Third Edition

1970 Models

TRIUMPH ENGINEERING COMPANY LIMITED
MERIDEN WORKS · ALLESLEY · COVENTRY · ENGLAND

TELEPHONE MERIDEN 331 TELEX 31305 TELEGRAMS "TRUSTY, COVENTRY"

© HDT 2001

PUBLISHED JANUARY 1970

PART No. 99-0904

© HDT 2001

TRIUMPH GUARANTEE

1. In this Guarantee the word "machine" refers to the motor cycle, scooter, motor-cycle combination or sidecar as the case may be, purchased by the Purchaser.

2. In order to obtain the benefit of this Guarantee, the Purchaser must have correctly completed the registration form and returned it to us within fourteen days of the purchase.

3. We will supply, free of charge, a new part in exchange for, or, if we consider repair sufficient, will repair free of charge any part proved within six months of the date of purchase of any new machine, (3 months USA) or within three months of its renewal or repair in the case of a part already renewed or repaired, to be defective by reason of our faulty workmanship or materials. We do not undertake to bear the cost of fitting such new or repaired part or accessory.

4. Any part considered to be defective must be sent to our Distributor carriage paid, accompanied by the following information:—
   (a) Name of purchaser and his address;
   (b) Date of purchase of machine;
   (c) Name of dealer from whom the purchase was made;
   (d) Engine number and model.

5. This Guarantee shall not extend to defect or damage appearing after misuse, neglect, abnormal stress or strain, or the incorporation or affixing of unsuitable attachments or parts and in particular:—
   (a) Hiring out;
   (b) Racing and Competitions;
   (c) Adaptation or alteration of any part or parts after leaving our Works;
   (d) The attaching of a sidecar in a manner not approved by us or to an unsuitable motor-cycle.

   This Guarantee shall not extend to machines whose trade mark, name or manufacturing number has been altered or removed, or in which has been used any part not supplied or approved by us, or to tyres, saddles, chains, speedometers, revolution counters and electrical equipment or to parts supplied to the order of the Purchaser and different from our standard specification.

6. Our liability and that of our dealer who sells the machine, shall be limited to that set out in this guarantee, and no other claims for consequential damage or injury to person or property, shall be admissible. All other conditions and warranties statutory or otherwise and whether express or implied are hereby excluded and no guarantee other than that expressly herein contained applies to the machine to which this Guarantee relates or any accessory or part thereof.

7. We reserve the right to modify or deviate from the Published Specification without notice.

REPAIRS GUARANTEE

1. Whilst the highest standard of workmanship and materials is aimed at, we cannot accept liability for any defects appearing more than three months after the machine, assembly or component has left our Works after being repaired.

2. We will repair or replace at our option free of charge any defective work, materials or parts relating to the repairs carried out by us appearing within that time but shall not be under any further, or other liability for any other loss or damage whether direct or consequential and our liability shall be limited to the cost of so making good. We do not undertake to bear the cost of fitting any replacement or repaired part.

3. We do not accept liability in respect of parts of proprietary manufacture, e.g. tyres, saddles, chains, speedometers, revolution counters and electrical equipment which may be used by us in effecting a repair. All other conditions and warranties statutory or otherwise express or implied are hereby excluded.

ILLUSTRATION INDEX

Fig. No.	Description	Page No.
1	CRANKSHAFT AND CONNECTING RODS	8
2	CRANKCASES	10
3	OIL PUMP, RELEASE VALVE AND FILTER	12
4	CYLINDER HEAD AND ROCKER BOXES	14
5	CYLINDER BARREL, PUSH ROD AND TUBES, TAPPETS	16
6	TIMING COVER AND CONTACT BREAKER	18
7	MANIFOLD AND THROTTLE LINKAGE	20
8	GEARBOX OUTER COVER	22
9	GEARBOX INNER COVER AND SELECTORS	24
10	GEARBOX SHAFTS AND GEARS	26
11	CLUTCH AND CLUTCH OPERATING MECHANISM	28
12	INNER AND OUTER CHAINCASE	30
13	PRIMARY TRANSMISSION AND OIL PUMP DRIVE	32
14	FRAME	34
15	SWINGING FORK AND SUSPENSION UNITS	36
16	ENGINE UNIT FITTINGS AND FOOTRESTS	38
17	EXHAUST PIPES AND SILENCERS (MUFFLERS)	40
18	TELESCOPIC FRONT FORK	42
19	HANDLEBAR MOUNTINGS AND STEERING DAMPER	44
20	FRONT WHEEL	46
21	REAR WHEEL	48
22	OIL COOLER	50
23	PETROL (GAS) TANK	52
24	OIL TANK	54
25	BATTERY CARRIER AND AIR FILTER	56
26	PANELS AND TWINSEAT	58
27	MUDGUARDS (FENDERS)	60
28	MUDGUARDS (FENDERS)	62
29	HANDLEBARS, CONTROLS, BINNACLE AND OIL WARNING LIGHT	64
30	CONTROL CABLES	66
31	TOOLKIT AND PILLION FOOTRESTS	68
32	AMAL CARBURETTER	70
33	SPEEDOMETER AND TACHOMETER	72
34	IGNITION COILS, HORNS, RECTIFIER AND ZENER DIODE	74
35	HEADLAMP, WIRING HARNESS, SWITCHES AND TAIL LAMP	76
36	NORTH AMERICAN VARIANT	78

PROPRIETARY GROUP

Ancillary equipment which is fitted to our motor cycles is of the highest quality and is guaranteed by the manufacturers and not by ourselves. Any repairs or claims should be directed to the actual makers or their local agents who will always give owners every possible assistance. The following are the addresses of the various manufacturers:—

CARBURETTERS.
Messrs. Amal Ltd.,
Holdford Road,
Witton,
Birmingham, 6.

CHAINS.
Renold Chains Ltd.,
Wythenshawe,
Manchester.

ELECTRICAL EQUIPMENT.
Messrs. J. Lucas Ltd.,
Gt. Hampton Street,
Birmingham, 18.

TYRES.
Dunlop Rubber Co. Ltd.,
Fort Dunlop,
Birmingham, 24.

The Avon Rubber Co. Ltd.,
Melksham,
Wilts.

SPARKING PLUGS.
Champion Sparking Plug Co. Ltd.,
Feltham,
Middlesex.

SPEEDOMETERS.
Messrs. Smiths Industries Ltd.,
Cricklewood Works,
London, N.W.2.

SUSPENSION UNITS.
Messrs. Girling Ltd.,
Birmingham Road,
West Bromwich,
Staffordshire.

© HDT 2001

© HDT 2001

INDEX

	Page
AIR FILTER	57
ALTERNATOR	19
AUTO-ADVANCE UNIT	19
AMMETER	65
BATTERY CARRIER	57
BINNACLE	65
BRAKE SWITCHES	67
CAMSHAFT, INLET AND EXHAUST	9
CAPACITOR, IGNITION	75
CARBURETTER	71
CENTRE STAND	35
CHAINS	33
CHAINCASE	31
CLUTCH	29
CLUTCH LEVER ASSEMBLY	65
COIL	75
CONDENSER PACK	77
CONNECTING RODS	9
CONTACT BREAKER	19
CONTROL CABLES	67
CONTROL LEVERS	65
CRANKCASE	11
CRANKSHAFT	9
CYLINDERS	17
CYLINDER HEAD	15
ENGINE PLATES	39
ENGINE TORQUE STAY	39
EXHAUST PIPES	41
EXHAUST PIPE ADAPTOR	15
FENDERS	61, 63
FOOTRESTS	39
FRAME	35
FRONT BRAKE	47
FRONT BRAKE LEVER	65
FRONT FORKS	43
FRONT WHEEL	47
GASKET SET	7
GEARBOX	23, 25, 27
HANDLEBARS	65
HANDLEBAR MOUNTINGS	45
HEADLAMP	77
HEAT SINK	75
HORN	75
KICKSTARTER	23
MANIFOLD	21
MUDGUARDS	61, 63
NORTH AMERICAN VARIANT	79
OIL COOLER	51
OIL PUMP	13
OIL TANK	55
OIL FILTER	13
OVERSIZE PARTS	7
PETROL (GAS) TANK	53
PISTONS	9
PROP STAND	35
PUSH RODS	17
REAR WHEEL	49
RECTIFIER	73
REFLECTORS	51, 61, 63
ROCKERS	15
SIDE PANEL	59
SILENCERS (MUFFLERS)	41
SPARKING PLUGS	75
SPEEDOMETER	73
SPEEDOMETER GEARBOX	49
STEERING DAMPER	45
STEERING RACES	35, 43
SUSPENSION UNITS	37
SWINGING FORK	37
SWITCHES	75
TACHOMETER	73
TACHOMETER GEARBOX	73
TAIL LAMP	77
TAPPETS	17
TIMING GEARS	9
TOOLKIT	69
TWIN SEAT	59
VALVES	15
VALVE GUIDES	15
WARNING LIGHTS	65
WIRING HARNESS	77
ZENER DIODE	75

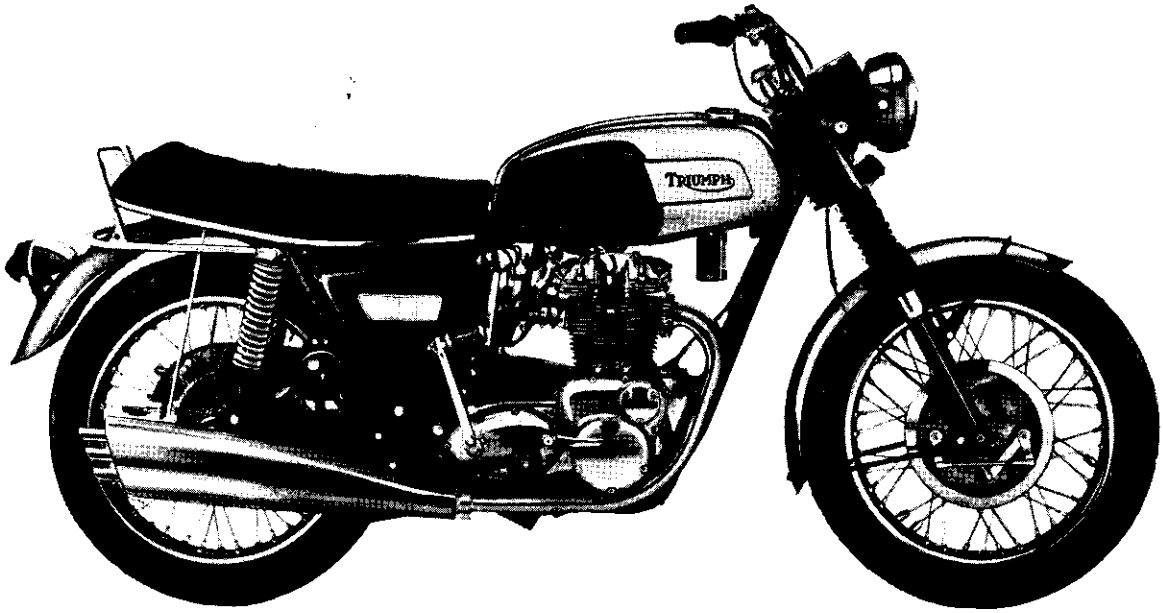

TRIDENT (T150) TECHNICAL DATA

Bore and stroke		67 x 70 mm. 2·67 x 2·751 ins.
Capacity		741 c.c. (45 cu. ins.)
Compression ratio		9·5 : 1
Spark plugs		Champion N3
Carburetors		3 Amal Concentric 626
	Main jet	150
	Needle jet	·106
	Throttle valve	No. 3
Gearbox sprocket		19 teeth
Chains	Front	$\frac{3}{8}''$ Triplex x 82 links
	Rear	$\frac{5}{8}'' \times \frac{3}{8}''$ x 106 links
Capacities	Fuel Tank	$4\frac{1}{4}$ Imp. galls. (5.12 U.S. galls.) (15·94 litres)
	Oil Tank	6 pints ($7\frac{1}{2}$ U.S. pints) (3·8 litres) working capacity
	Gearbox	$1\frac{1}{4}$ pints ($1\frac{1}{2}$ U.S. pints) (750 c.c.)
	Primary Chaincase	$\frac{5}{8}$ pint ($\frac{3}{4}$ U.S. pint) (350 c.c.)
	Front Forks (each leg)	$\frac{1}{3}$ pint (200 c.c.)
Brakes	Front, diameter	8″ (20·32 cm.)
	Rear, diameter	7″ (17·78 cm.)
Tyre size	Front	3·25 x 19 ins.
	Rear	4·10 x 19 ins.

© HDT 2001

© HDT 2001

HOW TO USE THIS PARTS CATALOGUE

First check that the engine number of your machine is subsequent to that quoted on the title page.

Next consult the index on Page 4 for the parts or group of parts which you wish to locate. When you have located the parts make sure from the end columns that the part you have located does apply to your machine. If proprietary parts are listed only under manufacturers part numbers and marked 'reference only', they are not available from the factory.

List the quantities required as single units; do not ask for "2 pairs" or "3 dozen".

PLEASE NOTE

THROUGHOUT THIS LIST, ASSEMBLIES ARE PRINTED IN CAPITALS AND THE COMPONENTS INCLUDED IN THAT ASSEMBLY ARE INDENTED IN THE DESCRIPTION COLUMN, REVERTING TO THE ORIGINAL ALIGNMENT WHEN THE ASSEMBLY IS COMPLETE. TO ORDER THE COMPLETE ASSEMBLY IT IS NECESSARY ONLY TO QUOTE THE ASSEMBLY NUMBER. ANY COMPONENT PARTS LISTED MAY ALSO BE OBTAINED SEPARATELY IF REQUIRED.

SPECIAL WORKSHOP TOOLS

A COMPLETE LIST OF WORKSHOP TOOLS CAN BE MADE AVAILABLE BY EITHER CONTACTING YOUR DEALER OR APPLYING DIRECT TO THE TRIUMPH SERVICE DEPARTMENT. IN MOST CASES THESE TOOLS ARE VERY COSTLY AS THEY ARE MADE ENTIRELY FOR WORKSHOP USE, AND THEREFORE, IT IS NOT RECOMMENDED THAT THE PRIVATE OWNER PURCHASES THE TOOLS IN ORDER TO AID SERVICING THE MACHINE ONCE OR TWICE ONLY. IN THESE CIRCUMSTANCES IT IS FAR MORE ECONOMICAL TO GET IN TOUCH WITH A RECOGNISED DEALER.

PISTON, PISTON RING AND BEARING OVERSIZES AND GASKET SETS

PISTONS (Complete with rings, gudgeon pins and circlips)

These are in effect "carton pack" assemblies

Compression ratio 9·5 : 1
- E9741 Std.
- E9762+10
- E9763+20
- E9764+40

PISTON RINGS

CP212
- 2 off E6838 Compression ring
- 1 off E9739 Scraper ring

Std.

CP212/10
- 2 off E9016 Compression ring
- 1 off E9766 Scraper ring

+10

CP212/20
- 2 off E9017 Compression ring
- 1 off E9767 Scraper ring

+20

CP212/40
- 2 off E9018 Compression ring
- 1 off E9768 Scraper ring

+40

BIG END BEARINGS SHELLS

E5998 Shell Std.
E9023 Shell —10
E9024 Shell —20
E9025 Shell —30
E9026 Shell —40

Decoke Gasket Set	99-0039
Overhaul Gasket Set	99-0030

MAIN BEARING SHELLS

E9027—·010 in. undersize
E9028—·020 in. undersize
E9029—·030 in. undersize
E9030—·040 in. undersize

© HDT 2001

© HDT 2001

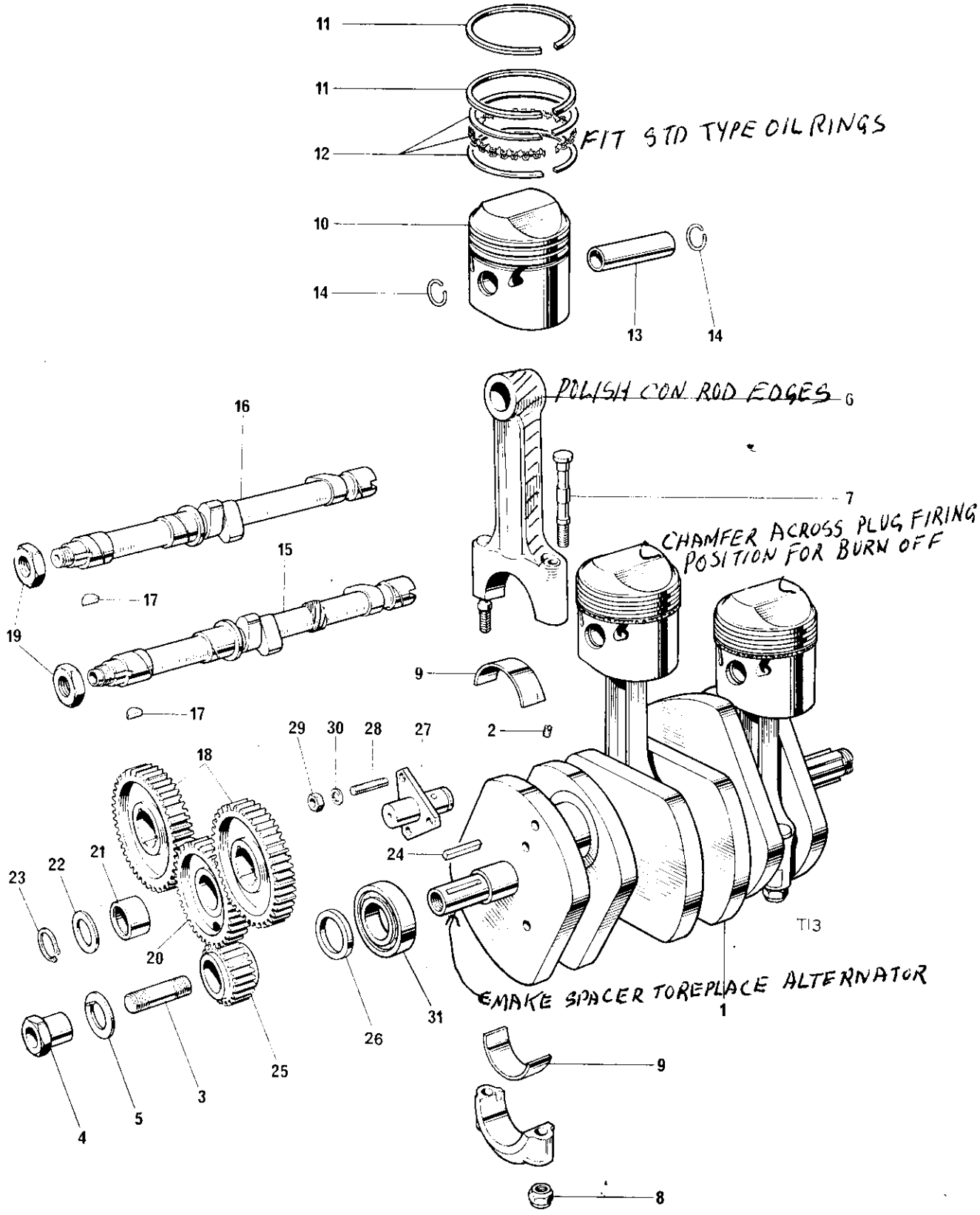

Fig. 1. CRANKSHAFT AND CONNECTING RODS

Ref. No.	Part No.	DESCRIPTION	QUANTITY	REMARKS

CRANKSHAFT AND CONNECTING RODS

1	E8778	CRANKSHAFT ASSEMBLY	1	
2	E6577	Oilway plug	4	
3	S548	Alternator stud ($1\frac{3}{8}$ in. O.A.)	1	
4	E8763	Rotor nut	1	
5	E3975	Washer	1	
6	E9740	CON ROD ASSEMBLY	3	
7	E9727	Bolt con rod	6	
8	S2016	Nut, con rod	6	
9	E5998	*Bearing, big end $ 8-00 Set	6	
10	E9741	†PISTON ASSEMBLY	3	
11	E6838	‡Taper piston ring	6	
12	E9739	Scraper ring	3	
13	E6836	Gudgeon pin	3	
14	E6840	Circlip	6	
15	E8765	Exhaust camshaft	1	
16	E8764	Inlet camshaft	1	
17	E1558	Key, camshaft	2	
18	E9802	Pinion camshaft	2	
19	E6523	Nut, camshaft	2	
20	E6029	Intermediate timing gear	1	
21	E7650	Needle roller bearing	1	
22	E6088	Thrust washer	1	
23	E8768	Circlip	1	
24	E3974	Key—timing pinion and rotor	1	
25	E6524	Timing pinion	1	
26	E6173	Distance piece	1	
27	E6030	Spindle, intermediate gear	1	
28	S547	Stud ($\frac{7}{8}$ in. O.A.)	1	
29	14–0401	Nut, intermediate gear	1	
30	S26–2	Washer	1	
31	E8780	Main bearing (roller) IN 205 W	1	

* Available in undersizes of −0·010″, 0·020″, 0·030″, 0·040″
† Available in oversizes of +0·010″, 0·020″, 0·040″
‡ Available in oversizes of +0·010, 0·020″, 0·040″

See page 7

© HDT 2001

© HDT 2001

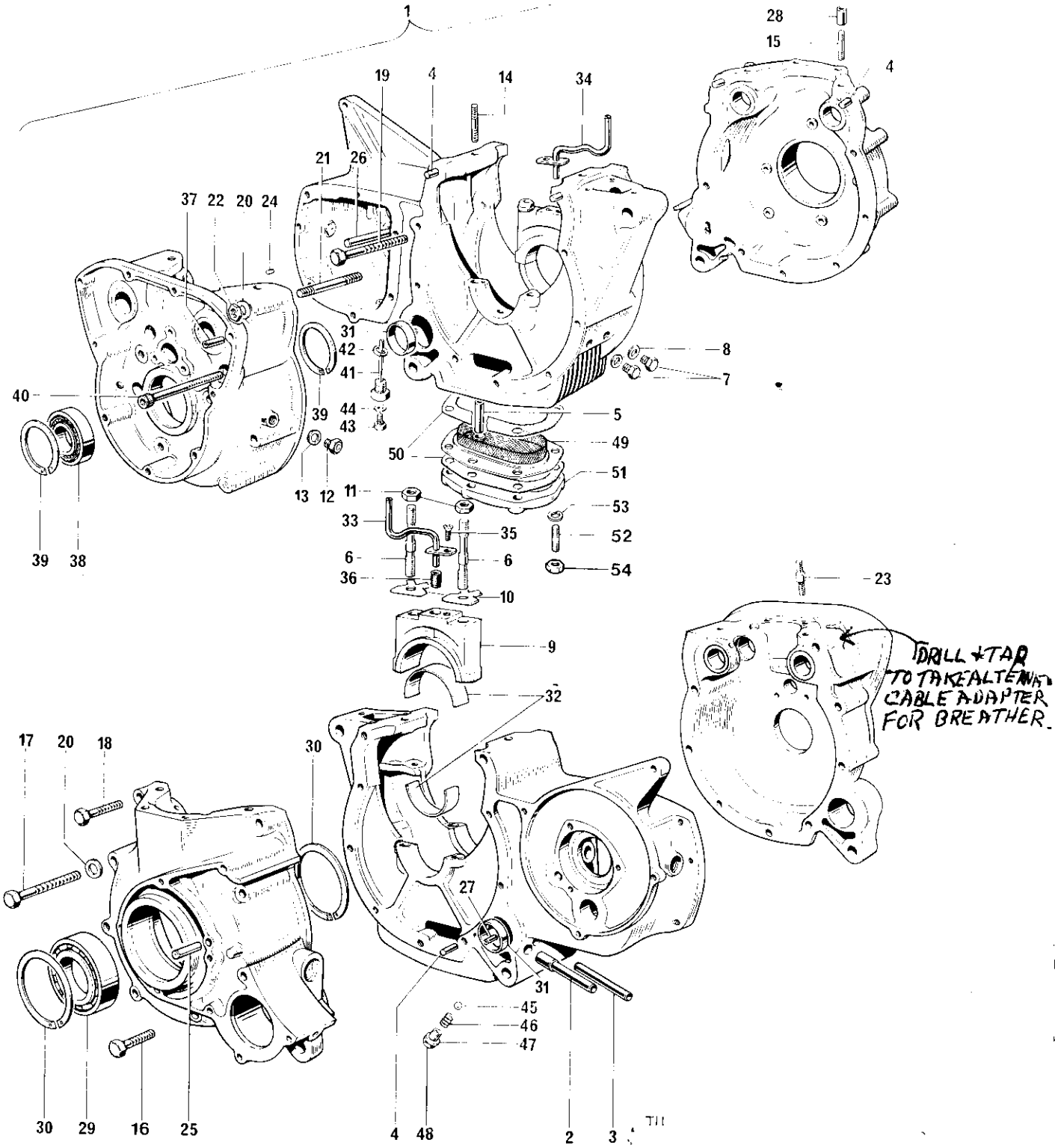

Fig. 2. CRANKCASES

Ref. No.	Part No.	DESCRIPTION	QUANTITY	REMARKS
		CRANKCASES		
1	E11008	CRANKCASES ...	1	
2	E6573	Oil return pipe stub	1	
3	E6574	Oil feed pipe stub	1	
4	E8774	Dowel T.S. and D.S.	4	
5	E6578	Scavenge tube	1	
6	E8745	Waisted stud, main bearing cap	4	
7	14–6113	Plug, main bearing oilways ($\frac{5}{8}$ in. U.H.)	2	
8	E8776	Washer	2	
9	E7423	Cap, main bearing	Not serviced	
10	E11129	Tab washer	4	
11	14–0303	Nut	4	
12	E8755	Plug, timing aperture	1	
13	E1523	Washer, timing aperture	1	
14	S1912	Stud, cylinder base ($1\frac{21}{32}$ in. O.A.)	4	
15	E8738	Stud, cylinder at dowel ($1\frac{13}{16}$ in. O.A.)	2	
16	14 6218	Clamping bolt ($1\frac{3}{8}$ in. U.H.)	2	
17	14–6226	Clamping bolt ($3\frac{1}{4}$ in. U.H.)	9	
18	14–6220	Clamping bolt ($1\frac{3}{4}$ in. U.H.)	2	
19	14–6223	Clamping bolt ($2\frac{1}{4}$ in. U.H.)	1	
20	S25–3	Washer	9	
21	14–1427	Stud, T.S. crankcase (3 in. O.A.)	2	
22	14–0302	Nut	2	
23	S1912	Stud, cylinder base ($1\frac{5}{8}$ in. O.A.)	4	
24	T912	Peg, needle roller thrust	1	
25	E11051	Spindle, intermediate gear	1	
26	T3989	Selector spindle	1	
27	E1532	Dowel, oil pump to crankcase	1	
28	E8751	Dowel, cylinder base	2	
29	E1591	D.S. main bearing	1	
30	E6025	Circlip, main bearing	2	
31	E9856	Sleeve at 'O' ring	2	
32	E6023	*Main Bearing Shell	4	
33	E8748	Tappet oil feed pipe T.S.	1	
34	E8746	Tappet oil feed pipe D.S.	1	
35	T1150	Screw, pipe to bearing cap	2	
36	E9843	Sealing rubber	4	
37	T989	Dowel	2	
38	E8780	Main bearing T.S. (roller)	1	
39	E6026	Circlip	2	
40	S678	Socket screw (4 in. U.H.)	1	
41	T3851	Gearbox drain plug	1	
42	E2441	Fibre washer	1	
43	S543	Level plug	1	
44	T1257	Fibre washer	1	
45	E8750	Non return valve ball ($\frac{7}{16}$ in. dia.)	1	
46	E6567	Spring	1	
47	E6742	Joint washer	1	
48	E6584	Plug	1	
49	E6501	Scavenge filter	1	
50	E11444	Gasket	2	
51	E6580	Cover	1	
52	E11349	Stud, sump plate	6	
53	S26–2	Spring washer	6	
54	14-0301	Nut	6	

*Available in undersizes of 0·010″, 0·020″, 0·030″, 0·040″ (see page 7).

© HDT 2001

© HDT 2001

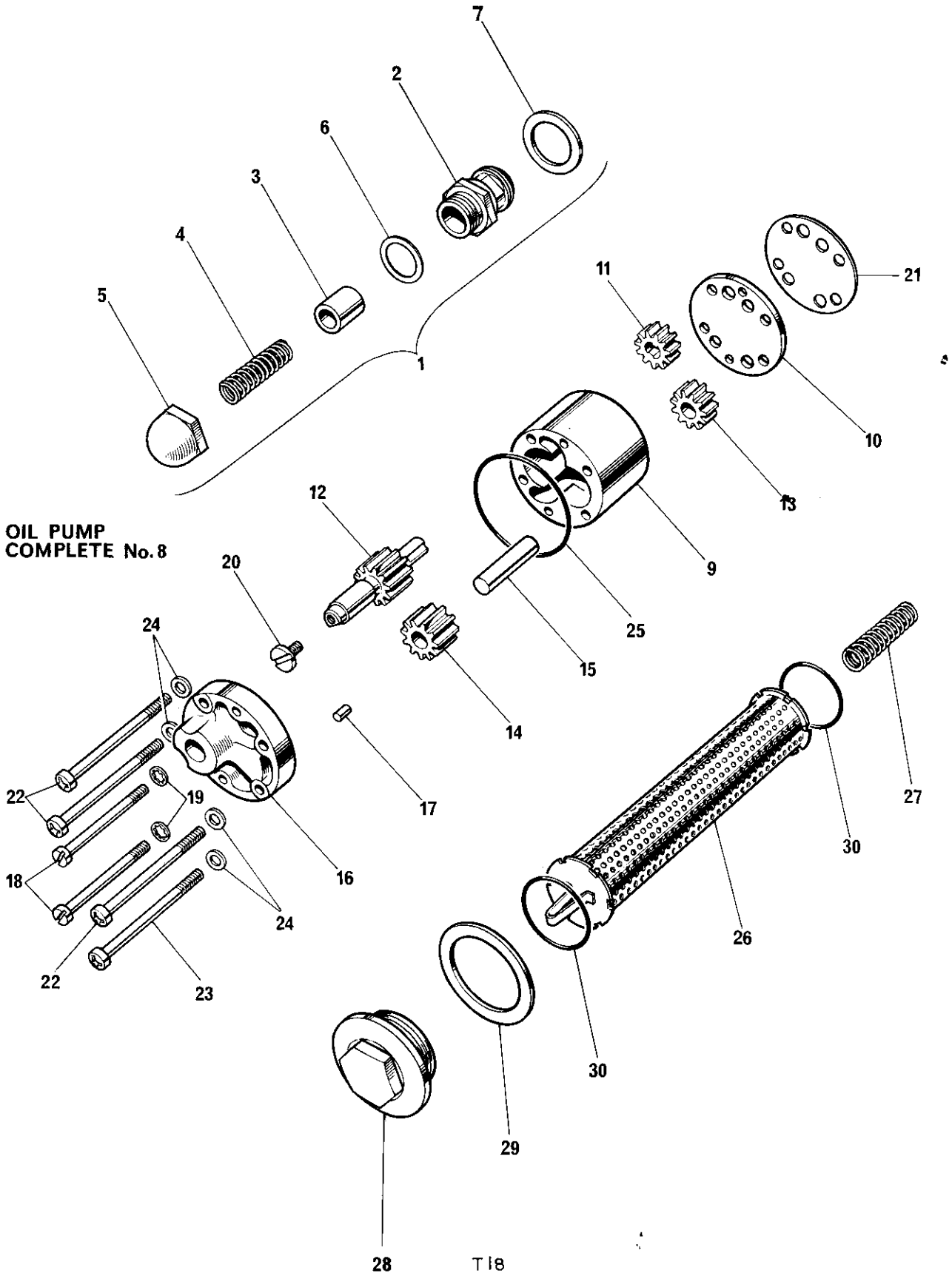

Fig. 3. OIL PUMP, RELEASE VALVE AND FILTER

Ref. No.	Part No.	DESCRIPTION	QUANTITY	REMARKS

OIL PUMP RELEASE VALVE AND OIL FILTER

1	E6595	OIL PRESSURE RELEASE VALVE	1	
2	E7590	Body	1	
3	GS251	Piston	1	
4	E7591	Spring	1	
5	E6596	Cap	1	
6	E9738	Joint washer (cap to body)	1	
7	E9737	Alloy washer	1	
8	E9001	OIL PUMP COMPLETE	1	
9	E6430	Oil pump, body	Not serviced	
10	E6502	Base plate	1	
11	E6455	Drive feed gear	1	
12	E6889	Drive scavenge gear	1	
13	E6038	Driven feed gear	1	
14	E6039	Driven scavenge gear	1	
15	E6454	Driven gear spindle	1	
16	E6525	Cover	1	
17	E6459	Dowel, cover to body	1	
18	S559	Screw, cover to body (2 in. U.H.)	2	
19	E8731	Washer, cover to pump screw	2	
20	E7250	Screw, pinion to drive gear ($\frac{3}{8}$ in. U.H.)	1	
21	E11442	Gasket, oil pump to crankcase	1	
22	E10003	Screw, pump to crankcase ($2\frac{1}{2}$ in. U.H.)	3	
23	E9601	Screw, pump to crankcase at dowel ($2\frac{3}{4}$ in. U.H.)	1	
24	E8732	Washer, pump to crankcase	3	
25	E6570	Seal, pump to crankcase	1	
26	E6571	Oil filter element	1	
27	E6130	Spring	1	
28	E11270 E6582	Cap	1	
29	E11070 E6131	'O' ring	1	
30	E8779	Filter seal	2	

© HDT 2001

© HDT 2001

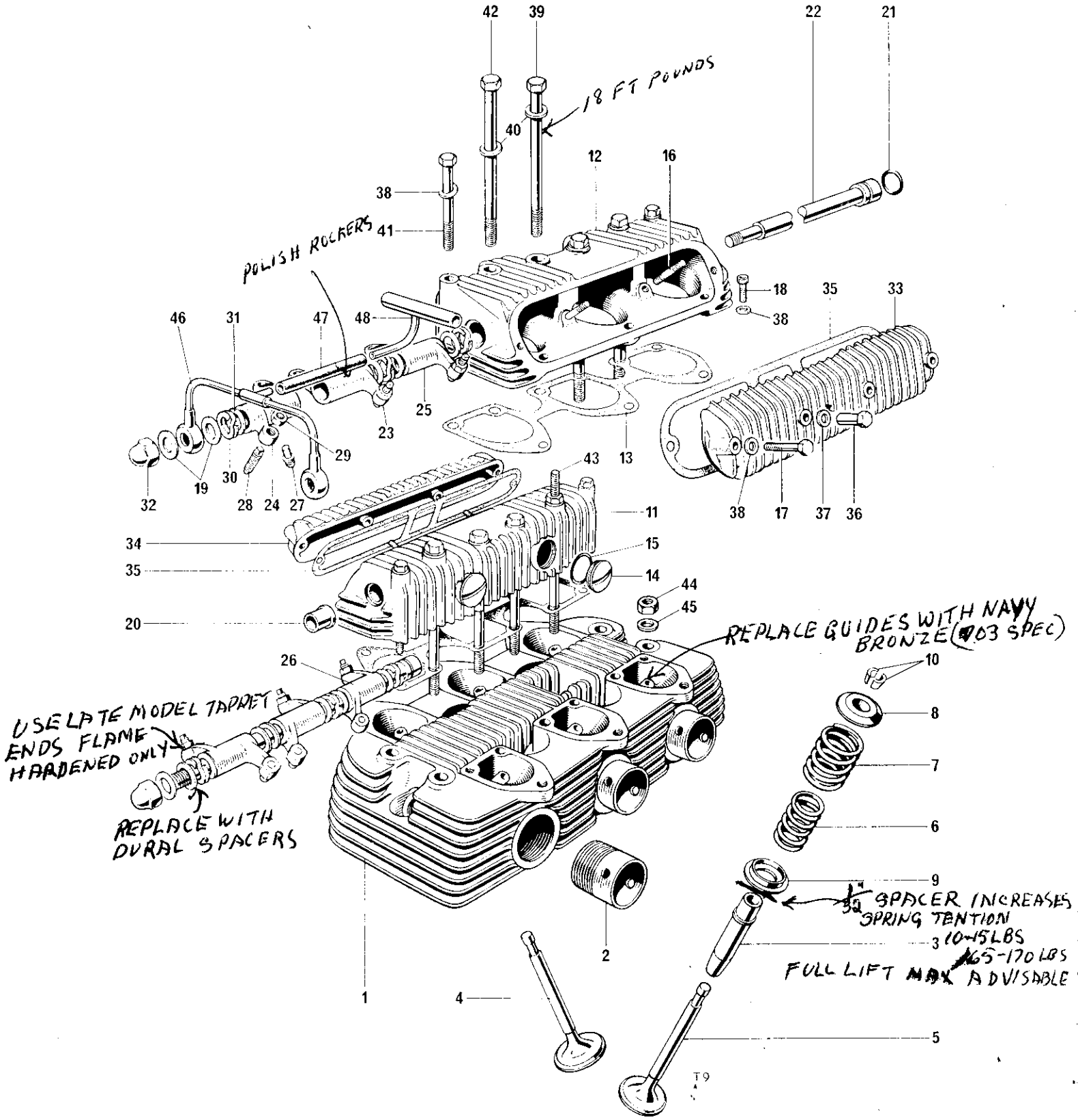

Fig. 4. CYLINDER HEAD AND ROCKER BOXES

Ref. No.	Part No.	DESCRIPTION	QUANTITY	REMARKS

CYLINDER HEAD AND ROCKER BOXES

1	E8781	CYLINDER HEAD	1	
2	E9510	Exhaust pipe adaptor	3	
3	E6420	Valve guide	6	
4	E6422	Inlet valve	3	
5	E6423	Exhaust valve	3	
6	E8787	Inner, valve spring (White and red paint dabs)	6	
7	E8788	Outer, valve spring (White and red paint dabs)	6	
8	E8720	Top collar	6	
9	E8789	Bottom cup	6	
10	99–0062	Split cotter	12	
11	E6561	Inlet rocker box	1	
12	E6562	Exhaust rocker box	1	
13	E8773	Rocker box gasket	2	
14	T2166	Rocker box cap	4	
15	E8782	"O" ring cap	4	
16	14–1401	Stud, rocker box cover (1 in. O.A.)	4	
17	14–0202	Bolt, rocker box cover (1 in. U.H.)	4	
18	14–7004	Screw	6	
19	E1335	Copper washer	4	
20	E6018	Bush, T.S. for rocker spindle	2	
21	E3253	"O" ring, D.S. bush	2	
22	E9558	Rocker spindle	2	
23	E11288	ROCKER LEVER, T.S. INLET/CENTRE EXHAUST	2	
24	E11287	ROCKER LEVER, T.S. EXHAUST/CENTRE INLET	2	
25	E11290	ROCKER LEVER, EXHAUST D.S.	1	
26	E11289	ROCKER LEVER, INLET D.S.	1	
27	E10070	Ball pin	6	
28	E8783	Adjusting pin	6	
29	14–0402	Locknut	6	
30	E1574	Thackeray washer	6	
31	E1575	Plain washer	12	
32	S550	Dome nut	2	
33	E6564	Inspection cover, exhaust	1	
34	E6563	Inspection cover, inlet	1	
35	E11445	Gasket	2	
36	E9237	Sleeve nut	4	
37	E9239	Plain washer	4	
38	S25–1	Washer	8	
39	E8820	Bolt, short rockerbox to barrel ($\frac{5}{16}$" x $4\frac{1}{4}$")	4	
40	E9240	Washer	8	
41	14–6211	Bolt, rocker box to head ($\frac{1}{4}$" x 3")	4	
42	E8819	Bolt, long rocker box to barrel ($\frac{5}{16}$" x $4\frac{1}{2}$")	2	
43	E10280	Bolt, torque stay, rocker box to barrel ($5\frac{13}{32}$ in.)	2	
44	14–0303	Nut	4	
45	F2184	Washer	4	
46	E11168	Rocker pipe	1	
47	E11175	Connecting tube	1	
48	E11172	Oil feed pipe	1	

© HDT 2001

© HDT 2001

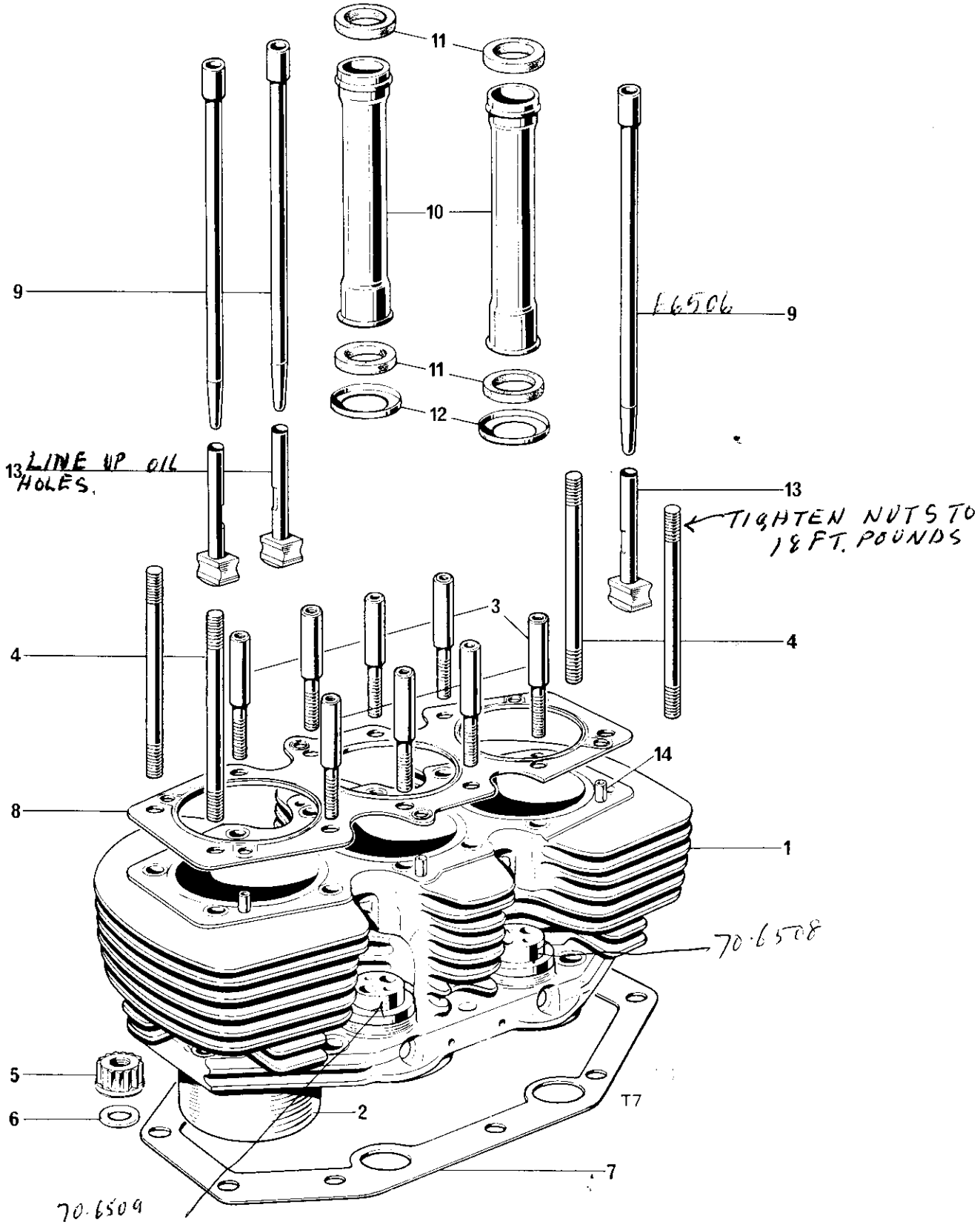

Fig. 5. CYLINDER BARREL, PUSH ROD AND TUBES, TAPPETS

Ref. No.	Part No.	DESCRIPTION	QUANTITY	REMARKS

CYLINDER BARREL, PUSH RODS AND TUBES, TAPPET BLOCKS

1	E6529	CYLINDER BARREL C/W LINERS	1
2	E8914	Cylinder liner	3
3	E8817	Pillar stud	8
4	S686	Stud, barrel to head ($4\frac{5}{8}$ in. O.A.)	4
5	S692	Base nut (12 point)	10
6	GS308	Washer	10
7	E6496	Cylinder base gasket	1
8	E11733	Cylinder head gasket	1
9	E11238 WAS E6506	Push rod	6
10	E6955	Push rod tube	4
11	E4752	Sealing rubber	8
12	E4746	Bottom cup	4
13	E8917	Tappet	6
14	E1532	Dowel	6

© HDT 2001

© HDT 2001

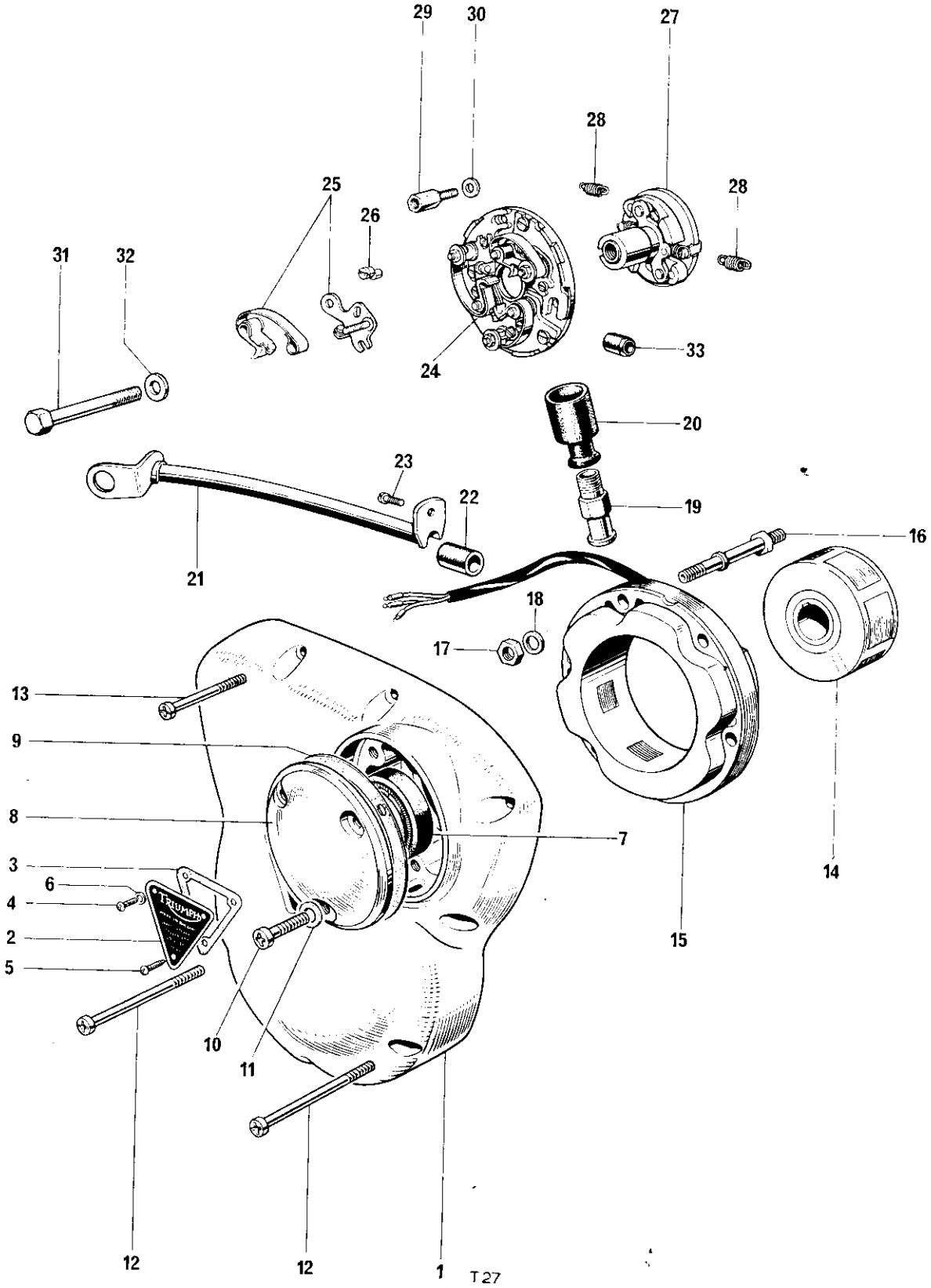

Fig. 6. TIMING COVER AND CONTACT BREAKER

Ref. No.	Part No.	DESCRIPTION	QUANTITY	REMARKS

TIMING COVER AND CONTACT BREAKER

1	E6432	Timing cover	1
2	E8762	Cover, timing aperture	1
3	E11440	Joint washer	1
4	E10007	Screw ($\frac{5}{16}$ in. U.H.)	2
5	E10006	Pointer screw	1
6	E9266	Washer	3
7	E4568	Oil seal	1
8	E6519	C:B. cover	1
9	E11441	Gasket C:B. cover	1
10	F4715	Screw ($\frac{13}{32}$ in. U.H.)	3
11	GS299	Washer	3
12	14–6612	Screw (2″ U.H.)	3
13	14–6608	Screw (1″ U.H.)	6
14	99–1138	Rotor 54213902	1
15	99–1016	Stator 47209	1
16	E6522	Stud, alternator mounting	3
17	S1852	Nut, alternator mounting	3
18	S25–3	Washer	3
19	E8760	Cable seal nut	1
20	E4144	Grommet	1
21	E8757	Cover, alternator leads	1
22	E8756	Rubber ferrule	1
23	H916	Screw, lead cover to crankcase ($\frac{5}{16}$ in. U.H.)	1
24	99–1013	CONTACT BREAKER 7CA 54419327	1
25	99–1014	Contact set 54419828	3
26	99–0769	Adjusting screw 54419220	3
27	99–1015	AUTO ADVANCE UNIT 54419867	1
28	99–0757	Spring 54415642	2
29	E6521	Pillar bolt	3
30	E6559	Washer	3
31	14–0208	Bolt C.B. cam to camshaft ($2\frac{1}{4}$″ U.H.)	1
32	S25–43	Washer	1
33	E8756	Grommet	1

© HDT 2001

© HDT 2001

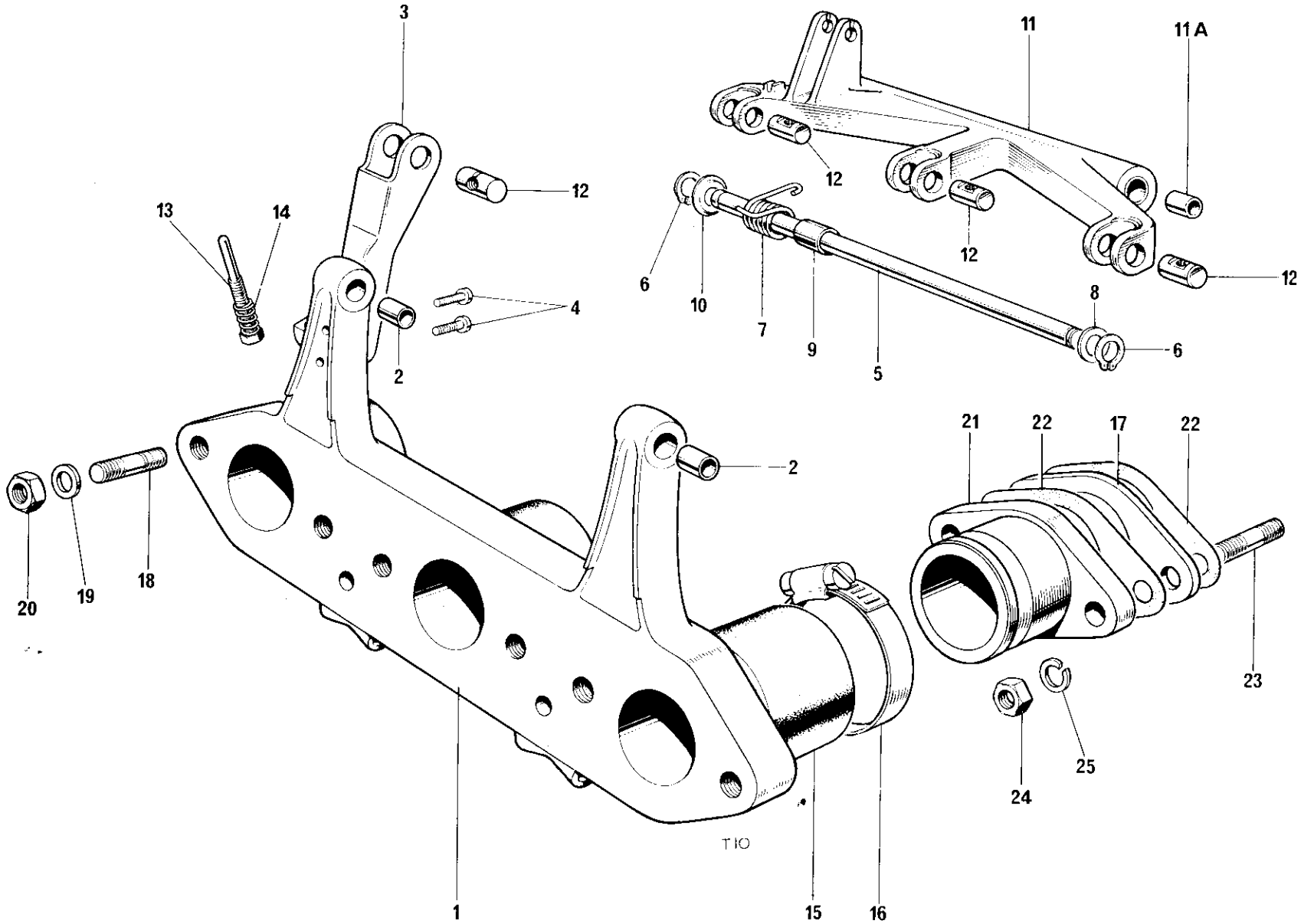

Fig. 7. MANIFOLD AND THROTTLE LINKAGE

Ref. No.	Part No.	DESCRIPTION	QUANTITY	REMARKS

MANIFOLD AND THROTTLE LINKAGE

1	E7633	ADAPTOR c/w BUSHES	1
2	E9073	Bush	2
3	E9242	Support arm	1
4	S774	Screw self-tapping ($\frac{5}{16}$ in. U.H.)	2
5	E9251	Spindle	1
6	E9255	Circlip	2
7	E9880	Return spring	1
8	F10245	Washer	1
9	E9820	Spacer	1
10	E9821	Retaining cup	1
11	E9278	Operating arm	1
11A	E9073	Bush	2
12	E9243	Trunnion	4
13	E9252	Screw	1
14	E9254	Spring	1
15	E9060	Rubber sleeve	3
16	D707	Jubilee type clip	6
17	E8981	Insulating block	3
18	14–1619	Stud carburetter ($1\frac{1}{4}''$ O.A.)	6
19	S25–3	Washer	6
20	14–0302	Nut, carburetter fixing	6
21	E9057	Stub, cylinder head	3
22	E11446	Joint washer, stub to head	6
23	S557	Stud ($1\frac{5}{32}''$ O.A.)	6
24	14–0301	Nut, cylinder head	6
25	S25–13	Washer	6

© HDT 2001

© HDT 2001

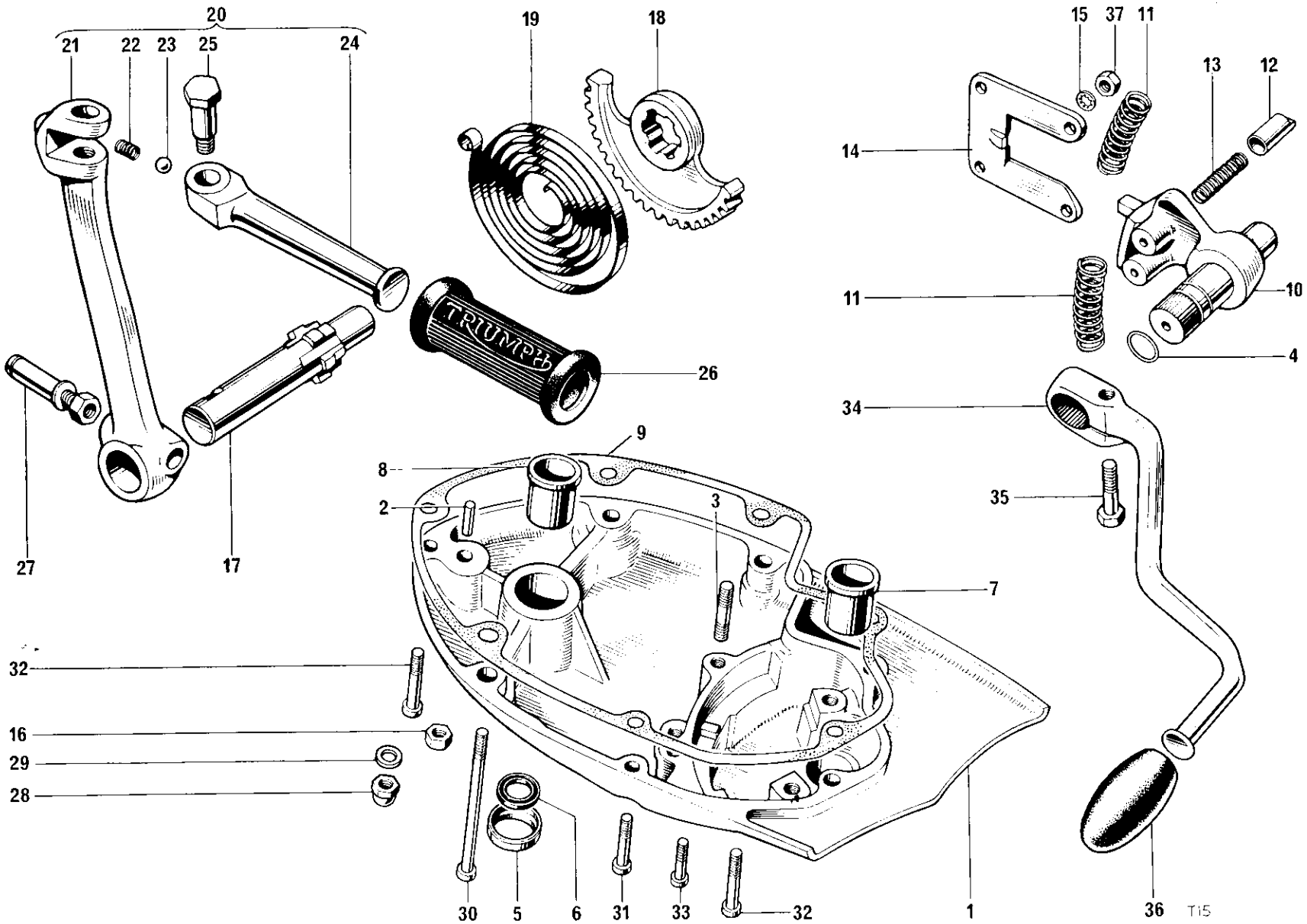

Fig. 8. GEARBOX OUTER COVER

Ref. No.	Part No.	DESCRIPTION	QUANTITY	REMARKS

GEARBOX OUTER COVER

1	T3750	GEARBOX OUTER COVER	1
2	T47	Kickstart anchor peg	1
3	S547	Stud guide plate ($\frac{7}{8}$ in. O.A.)	4
4	E3309	Sealing Ring	1
5	T1955	Housing, oil seal	1
6	T1956	Oil seal	1
7	T57	Bush (F/C Spindle)	1
8	T23	Bush (K/S Spindle)	1
9	E11450	Gasket, outer to inner gearbox	1
10	T408/9	Plunger quadrant	1
11	T404	Spring	2
12	T406	Plunger	2
13	T405	Spring	2
14	T407	Guide plate	1
15	E1612	Washer	4
16	14–0302	Nut	4
17	T24A	Kickstart axle shaft	1
18	T4117	Kickstart quadrant	1
19	T31	Kickstart return spring	1
20	T3632	FOLDING KICKSTART COMPLETE	1
21	T2173	Crank	1
22	T1167	Spring	1
23	H2704	Ball, $\frac{1}{4}$ in. dia.	1
24	T1272	Pedal	1
25	S541	Pivot bolt	1
26	T2330	Rubber	1
27	T1222	Cotter pin c/w nut and washer (nut only F879)	1
28	S544	Domed nut outer cover	2
29	S25–3	Washer	2
30	S1815	Screw, outer cover long ($4\frac{1}{4}''$ U.H.)	1
31	14–6609	Screw, outer cover ($1\frac{1}{4}''$ U.H.)	1
32	14–6610	Screw, outer cover ($1\frac{1}{2}''$ U.H.)	2
33	14–6608	Screw, outer cover (1″ U.H.)	1
34	T3751	Gearchange pedal	1
35	14–0201	Pinch bolt ($1\frac{1}{2}$ in. U.H.)	1
36	T2450	Rubber	1
37	14–0301	Nut	4

© HDT 2001

© HDT 2001

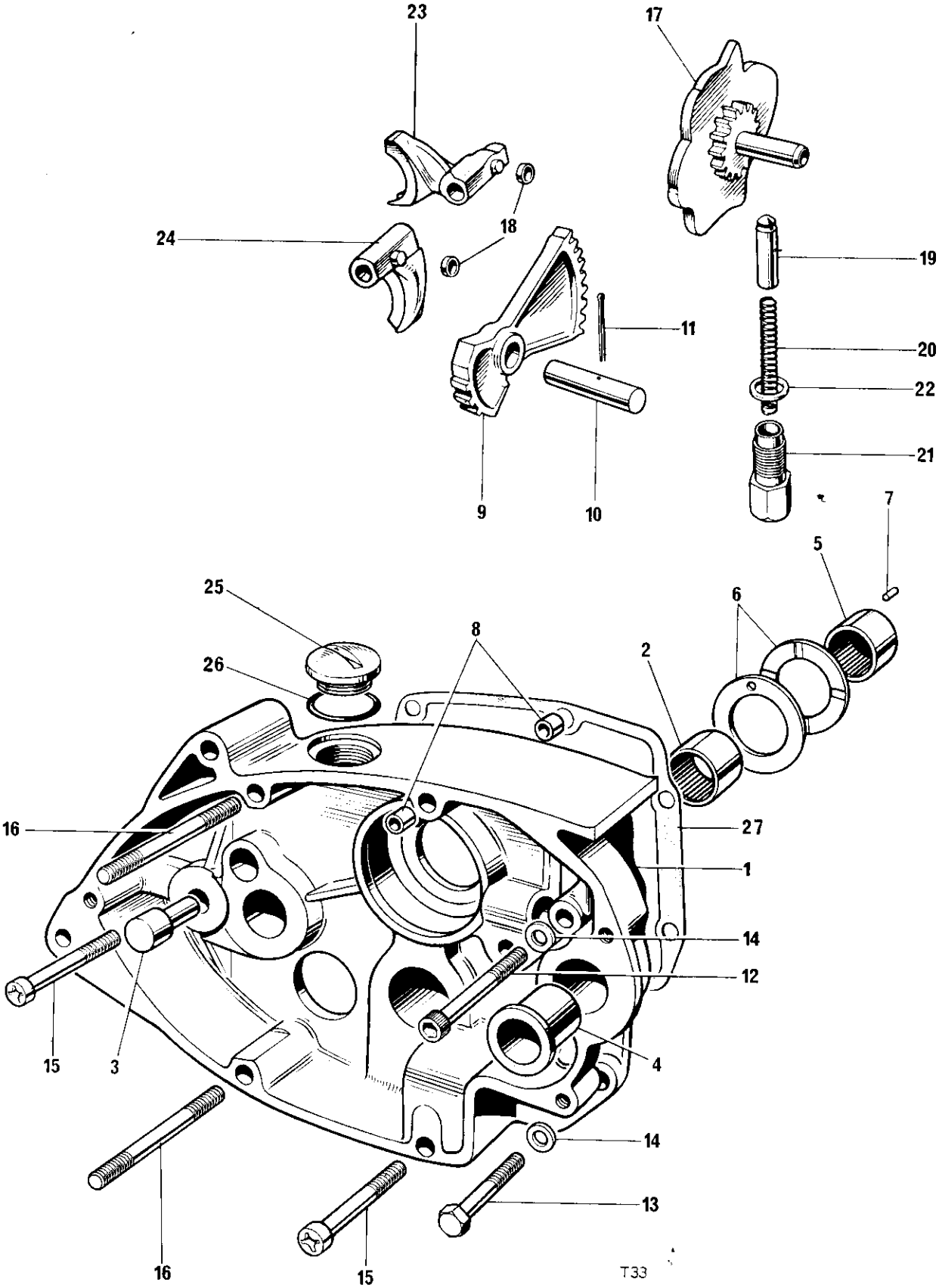

Fig. 9. GEARBOX INNER COVER AND SELECTORS

Ref. No.	Part No.	DESCRIPTION	QUANTITY	REMARKS

GEARBOX INNER COVER AND SELECTORS

1	T4112	INNER COVER	1	
2	T1614	Layshaft bearing	1	
3	T45	Kickstart stop	1	
4	T412	Bush (F/C spindle)	1	
5	T1606	Layshaft, needle roller bearing	1	
6	T1607	Thrust washer	2	
7	T912	Peg, L/S thrust washer	1	(Also in crank-case group)
8	T989	Dowel, inner to outer cover	2	
9	T397	Quadrant	1	
10	T1896	Quadrant spindle	1	
11	—	Split pin ($\frac{5}{64}$ in. x $1\frac{3}{8}$ in.)	Reference only	
12	14–7101	Socket screw ($3\frac{1}{4}$ in. U.H.)	1	
13	14–6121	Bolt, inner cover to crankcase ($2\frac{1}{4}$ in. U.H.)	1	
14	E3446	Washer, inner cover to crankcase	2	
15	14–6614	Screw inner cover to crankcase ($2\frac{1}{2}$ in. U.H.)	2	
16	14–1431	Stud, gearbox cover	2	
17	T4055	Camplate	1	
18	NT261	Camplate roller	2	
19	T3660	Plunger	1	
20	T4059	Plunger spring	1	
21	T2172	Plunger sleeve nut	1	
22	T3978	Washer	1	
23	T2596	Selector fork mainshaft	1	
24	T913	Selector fork layshaft	1	
25	T2166	Filler cap	1	
26	E8782	"O" ring	1	
27	E11447	Gasket, inner cover to crankcase	1	

© HDT 2001

© HDT 2001

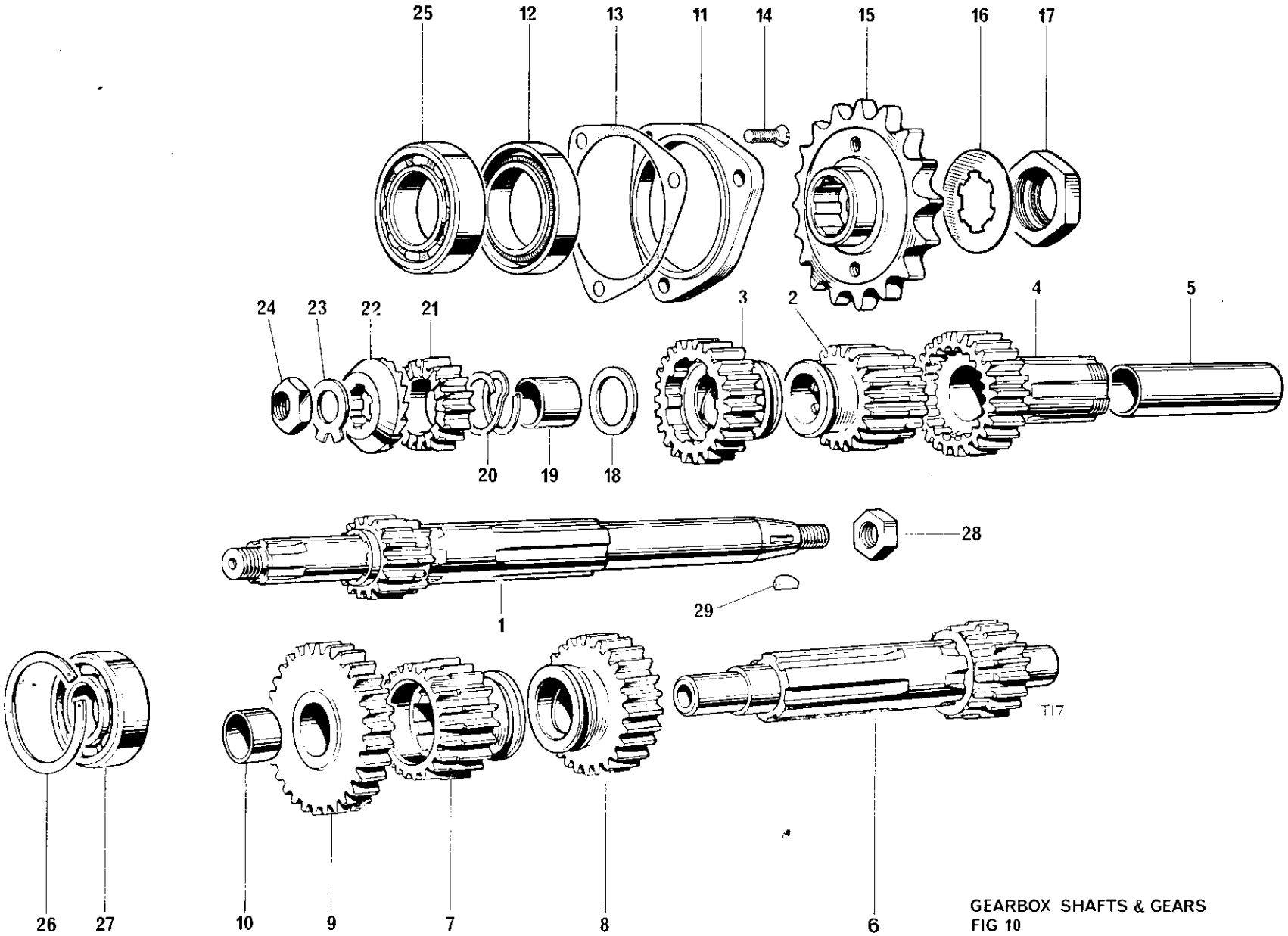

Fig. 10. GEARBOX SHAFTS AND GEARS

Ref. No.	Part No.	DESCRIPTION	QUANTITY	REMARKS

GEARBOX SHAFTS AND GEARS

1	~~T3982~~ USE T4175	MAINSHAFT C/W LOW GEAR (16T)	1
2	T3857	MAINSHAFT 2ND GEAR (20T)	1
3	T3889	MAINSHAFT 3RD GEAR (23T)	1
4	T2176	MAINSHAFT HIGH GEAR (26T)	1
5	T3785	High gear bush	1
6	~~T3864~~ T4155	LAYSHAFT C/W HIGH GEAR (20T)	1
7	T3890	LAYSHAFT 3RD GEAR (22T)	1
8	T3861	LAYSHAFT 2ND GEAR (26T)	1
9	T3862	LAYSHAFT LOW GEAR (30T)	1
10	T928	Low gear bush	1
11	T2153	Housing, high gear oil seal	1
12	T3634	Oil seal high gear	1
13	E11451	Gasket, high gear oil seal housing	1
14	14–6504	Fixing screw (¾ in. O.A.)	3
15	T1918	Gearbox sprocket 19T	1
16	T2116	Tab washer	1
17	T4051	Locknut sprocket assembly	1
18	T1962	Kickstart pinion washer	1
19	T1963	Kickstart pinion sleeve	1
20	T1250	Kickstart pinion spring	1
21	T730	Kickstart pinion	1
22	T731	Kickstart ratchet	1
23	T732	Tab washer mainshaft nut	1
24	S594	Nut, mainshaft	1
25	T448	High gear bearing	1
26	T4113	Bearing circlip	1
27	T3621	Mainshaft bearing	1
28	S681	Nut, clutch hub to mainshaft	1
29	S66–1	Key	1

© HDT 2001

© HDT 2001

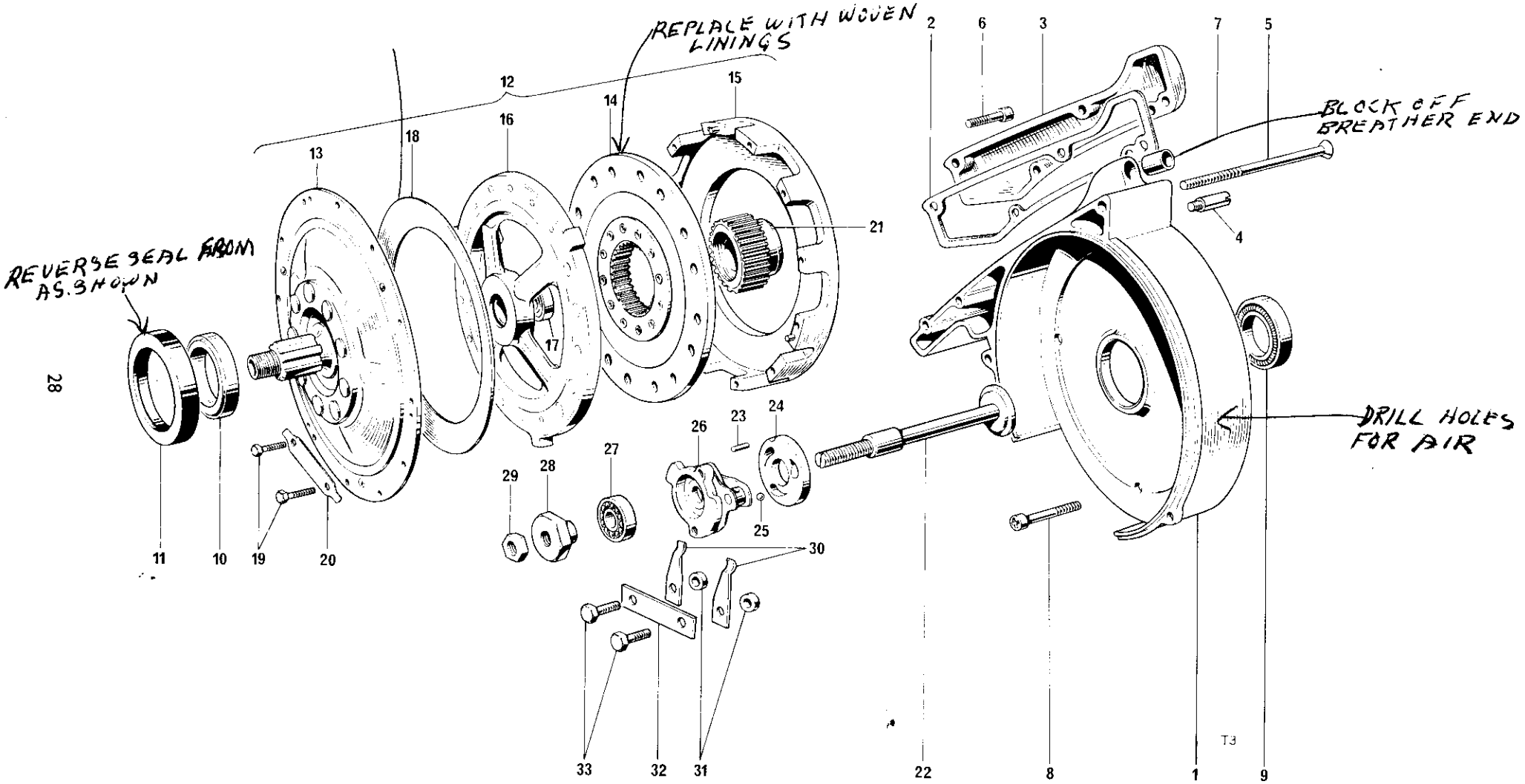

Fig. 11. CLUTCH AND CLUTCH OPERATING MECHANISM

Ref. No.	Part No.	DESCRIPTION	QUANTITY	REMARKS

CLUTCH AND CLUTCH OPERATING MECHANISM

1	T2554	Clutch cover	1
2	E11452	Joint washer	1
3	T2555	Cover, breather duct	1
4	T3756	Adaptor	1
5	14–6510	Screw, long, cover to crankcase (4 in. U.H.)	1
6	S680	Screw short cover to crankcase ($\frac{11}{16}$ in.)	3
7	T2557	Tube	1
8	14–6610	Screw cover to crankcase ($1\frac{1}{2}$ in.)	3
9	T3642	Oil seal cover to mainshaft	1
10	T2479	Sleeve, shaft oil seal	1
11	T3642	Oil seal clutch shaft	1
12	T2562	CLUTCH ASSEMBLY (BORG & BECK 76183)	1
13	T3705	End cover, assembly (BORG & BECK 76169)	1
14	T3709	Driven plate assembly (BORG & BECK 53273)	1
15	T3708	Drive ring (BORG & BECK 76167)	1
16	T3715	Pressure plate (BORG & BECK 76184)	1
17	T3717	Thrust bearing (BORG & BECK 76168)	1
18	T3718	Diaphram spring red (BORG & BECK 75303/13)	1
19	T3719	Bolt end cover to housing (BORG & BECK K26904) ...	12
20	T3720	Tab washer, end cover to housing (BORG & BECK 76170)	6
21	T2580	Clutch hub	1
22	T2552	Pull rod clutch release	1
23	T912	Peg, outer chaincase (for clutch operation)	1
24	T2465	Thrust plate inner	1
25	S70–3	Ball, $\frac{1}{4}$ in. dia.	3
26	T2547	Clutch lever complete	1
27	T3647	Bearing, outer thrust plate	1
28	T2553	Sleeve nut	1
29	14–0402	Locknut	1
30	T2473	Spring, outer thrust plate	2
31	T3638	Distance piece, outer thrust plate	2
32	T2474	Tab washer	1
33	14–6102	Bolt ($\frac{1}{2}$ in. U.H.)	2

© HDT 2001

FOR ENG BREATHING MODIFY

© HDT 2001

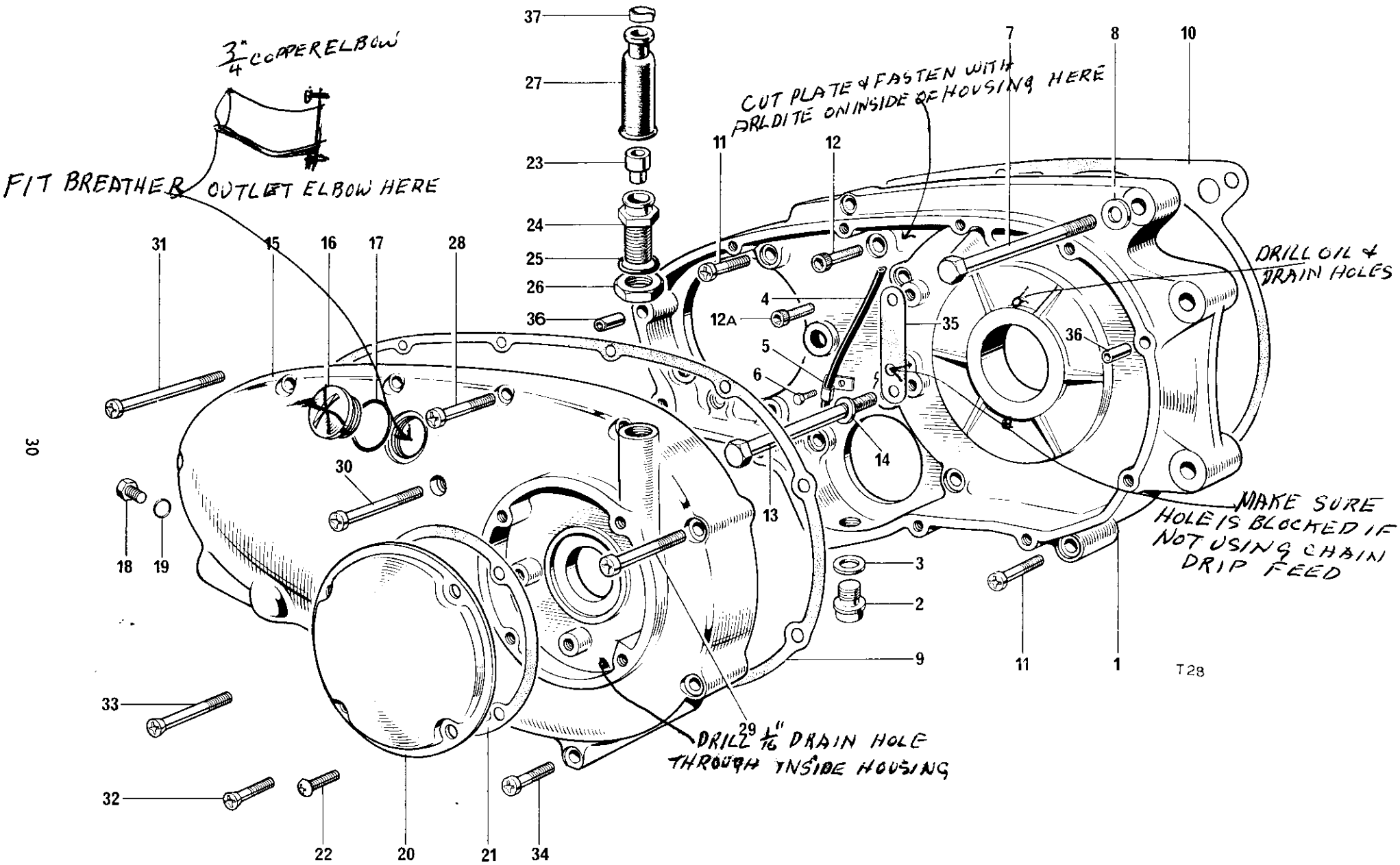

Fig. 12. INNER AND OUTER CHAINCASE

Ref. No.	Part No.	DESCRIPTION	QUANTITY	REMARKS

INNER AND OUTER CHAINCASE

1	T4010	Inner primary chaincase	1
2	S536	Drain plug	1
3	E402	Washer	1
4	E8786	Tube, chain oiler	1
5	E4705	Clip, chain oiler—tube	1
6	14–6101	Bolt, clip ($\frac{1}{2}$ in. U.H.)	1
7	S1820	Bolt, long ($4\frac{1}{2}$ in. U.H.)	1
8	S25–3	Washer	1
9	E11454	Joint washer inner to outer crankcase	1
10	E11453	Gasket inner case to crankcase	1
11	14–6606	Screw, short (1 in. U.H.)	2
12	14–7006	Socket screw (1 in. U.H)	6
12A	14–7004	Socket screw ($\frac{3}{4}$ in. U.H.)	1
13	S1819	Bolt ($4\frac{1}{4}$ in. U.H.)	1
14	S25–3	Washer	1
15	T3953	Outer primary chaincase	1
16	T2166	Filler plug	1
17	E8782	"O" ring	1
18	T2259	Tensioner adjuster plug	1
19	T3733	"O" ring	1
20	T3954	Inspection cover	1
21	E11449	Inspection cover gasket	1
22	14–6605	Screw, inspection cover ($\frac{5}{8}$ in. U.H.)	4
23	T2220	Clutch cable abutment	1
24	T1645	Adaptor	1
25	T3733	Sealing Ring	1
26	S567	Locknut	1
27	T1646	Rubber cap	1
28	14–6611	Screw, outer to inner chaincase ($1\frac{3}{4}$ in. U.H.)	7
29	14–6612	Screw, outer to inner chaincase (2 in. U.H.)	1
30	14–6613	Screw, long outer to inner chaincase ($2\frac{1}{4}$ in.)	2
31	14–6615	Screw, outer to inner chaincase (3 in. U.H.)	1
32	14–6504	Screw, short countersunk ($\frac{3}{4}$ in. U.H.)	2
33	14–6510	Screw, longer countersunk (2 in. U.H.)	1
34	14–6610	Screw, short, chaincase ($1\frac{1}{2}$ in. U.H.)	1
35	E11455	Joint washer	1
36	T989	Dowel	2
37	T4194	Clip, clutch cable	1

© HDT 2001

© HDT 2001

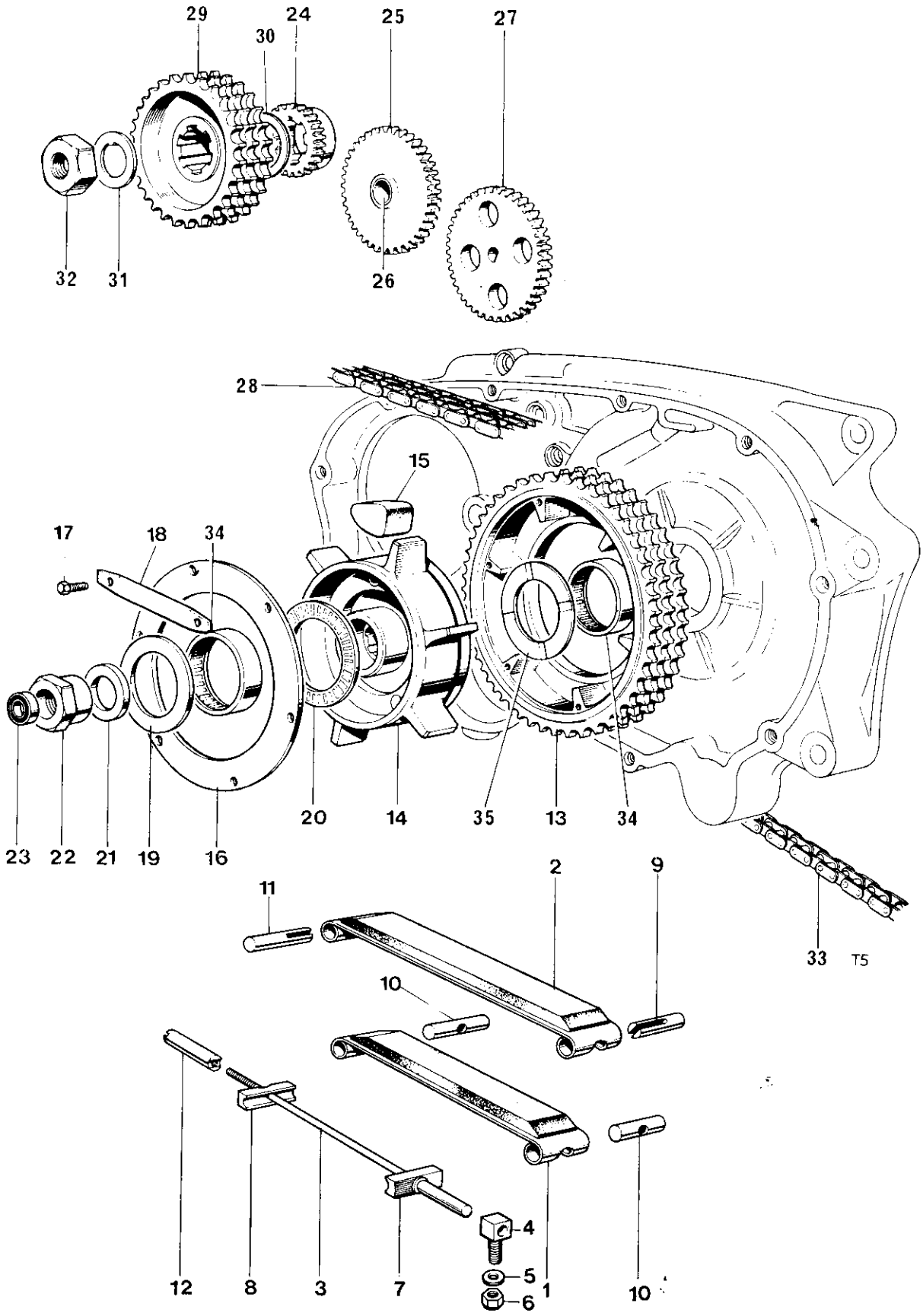

Fig. 13. PRIMARY TRANSMISSION AND OIL PUMP DRIVE

Ref. No.	Part No.	DESCRIPTION	QUANTITY	REMARKS

PRIMARY TRANSMISSION AND OIL PUMP DRIVE

1	T3610	Tensioner blade	1	
2	E6061	Tensioner blade	1	
3	T3983	Tie rod	1	
4	T3986	Eye bolt	1	
5	T3987	Washer	1	
6	14–1901	Nut	1	
7	E9257	Saddle washer (rear)	1	
8	E9258	Saddle washer (adjuster end)	1	
9	E9256	Trunnion	1	
10	E5977	Trunnion	2	
11	T3614	Pivot pin	1	
12	T3617	Adjuster nut	1	
13	T2245	Clutch sprocket	1	
14	T2471	Spider	1	
15	T1723	Shock absorber rubber	12	
16	T4004	Retaining plate	1	
17	T3940	Bolt, retaining plate	6	
18	T3941	Tab washer	3	
19	T2215	Outer thrust washer, clutch shaft	1	
20	T3646	Thrust race	1	
21	T2478	Spacer, shock absorber nut	1	
22	T2480	Nut	1	
23	T3644	Oil seal	1	
24	E7248	Driven gear	1	
25	E7246	INTERMEDIATE GEAR C/W BUSH	1	
26	E6885	Bush	1	
27	E7249	Oil pump driving gear	1	
28	D699	Primary chain, triple row, 82 links	1	
29	E6890	Engine sprocket	1	
30	E9634	Shim, engine sprocket (0·010 in. thick)	as required	
31	E8785	Tab washer	1	
32	S585	Nut, engine sprocket	1	
33	D2118	Rear chain 107 links	1	
34	T3643	Needle race	2	
35	T2214	Thrust washer, inner	1	

© HDT 2001

© HDT 2001

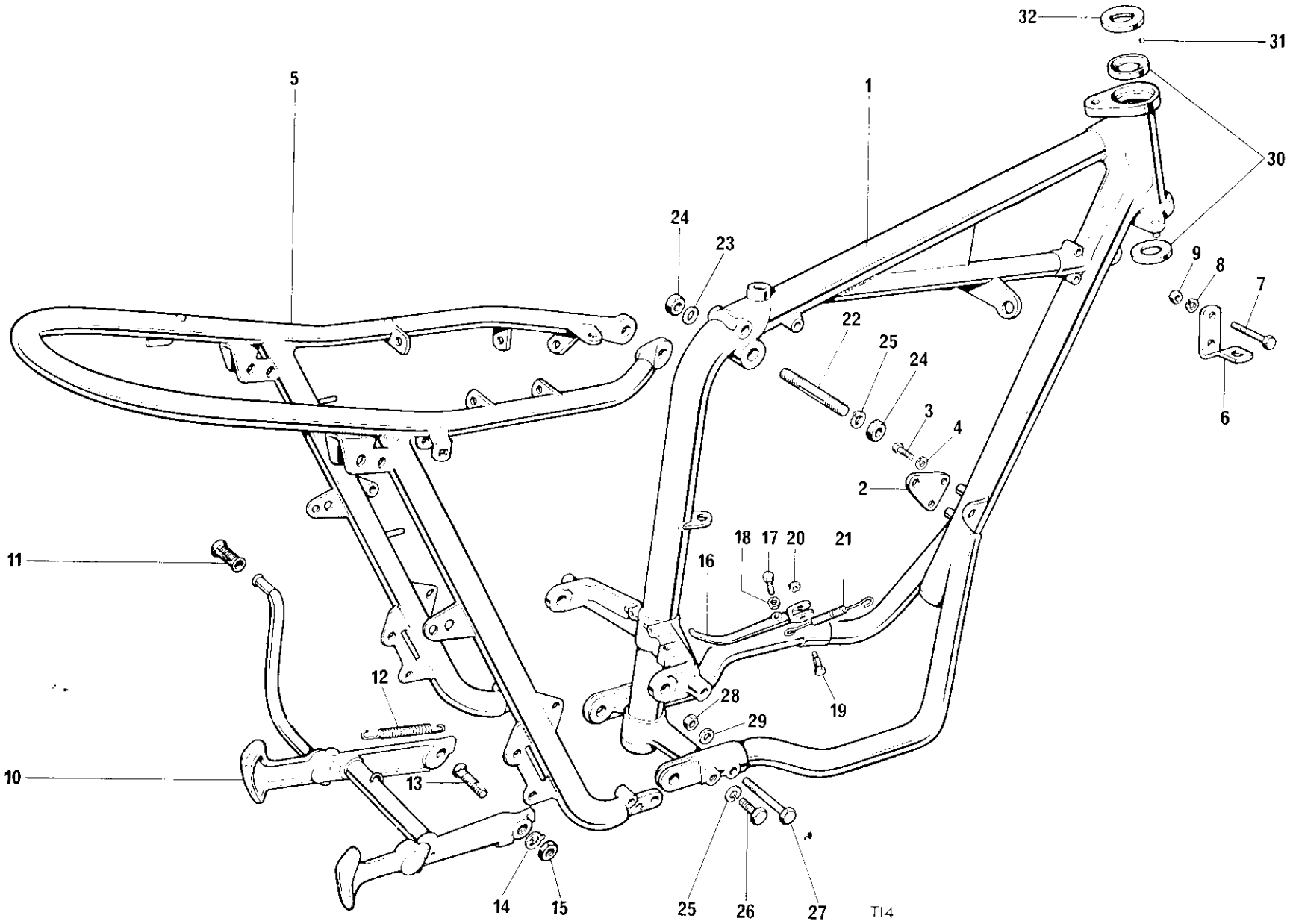

Fig. 14. FRAME

Ref. No.	Part No.	DESCRIPTION	QUANTITY	REMARKS

FRAME

1	F9329	Front Frame	1
Not illus.	F7155	Lock stops	1
2	F7159	Front D.S. engine plate	1
3	14–0126	Bolt ($\frac{3}{4}$ in. U.H.)	2
4	S26–1	Spring washer	2
5	F9330	Rear frame	1
6	F9380	Mounting bracket, petrol tank	2
7	S1805	Bolt ($2\frac{1}{8}$ in. U.H.)	2
8	S26–3	Washer	2
9	14–0402	Nut	2
10	F11267	Centre stand	1
11	T2331	Pedal rubber	1
12	F4671	Spring	1
13	S1978	Pivot bolt	2
14	F11270	Tab washer	2
15	14–0404	Nut	2
16	F11560	Prop stand	1
17	14–0216	Bolt	1
18	14–0402	Nut	1
19	F7021	Swivel pin	1
20	14–0703	Nut, swivel pin	1
21	F8392	Spring	1
22	14–0241	Stud, top rear to front frame ($3\frac{7}{8}$ in.)	1
23	S25–2	Washer	2
24	14–1303	Nut	2
25	99–0046	Spring Washer	4
26	S588	Bolt, bottom rear to front frame ($1\frac{3}{16}$ in. U.H.)	2
27	14–0251	Bolt, front rear to front frame ($1\frac{1}{4}$ in.)	2
28	14–1304	Nut	2
29	F4370	Washer	2
30	H111	Cup, top and bottom steering race	2
31	S70–3	Ball, top and bottom steering race	40
32	H1018	Top cone (c/w dust cover)	1
Not illus.	D2452	Transfer "Safety Standards"	1

© HDT 2001

© HDT 2001

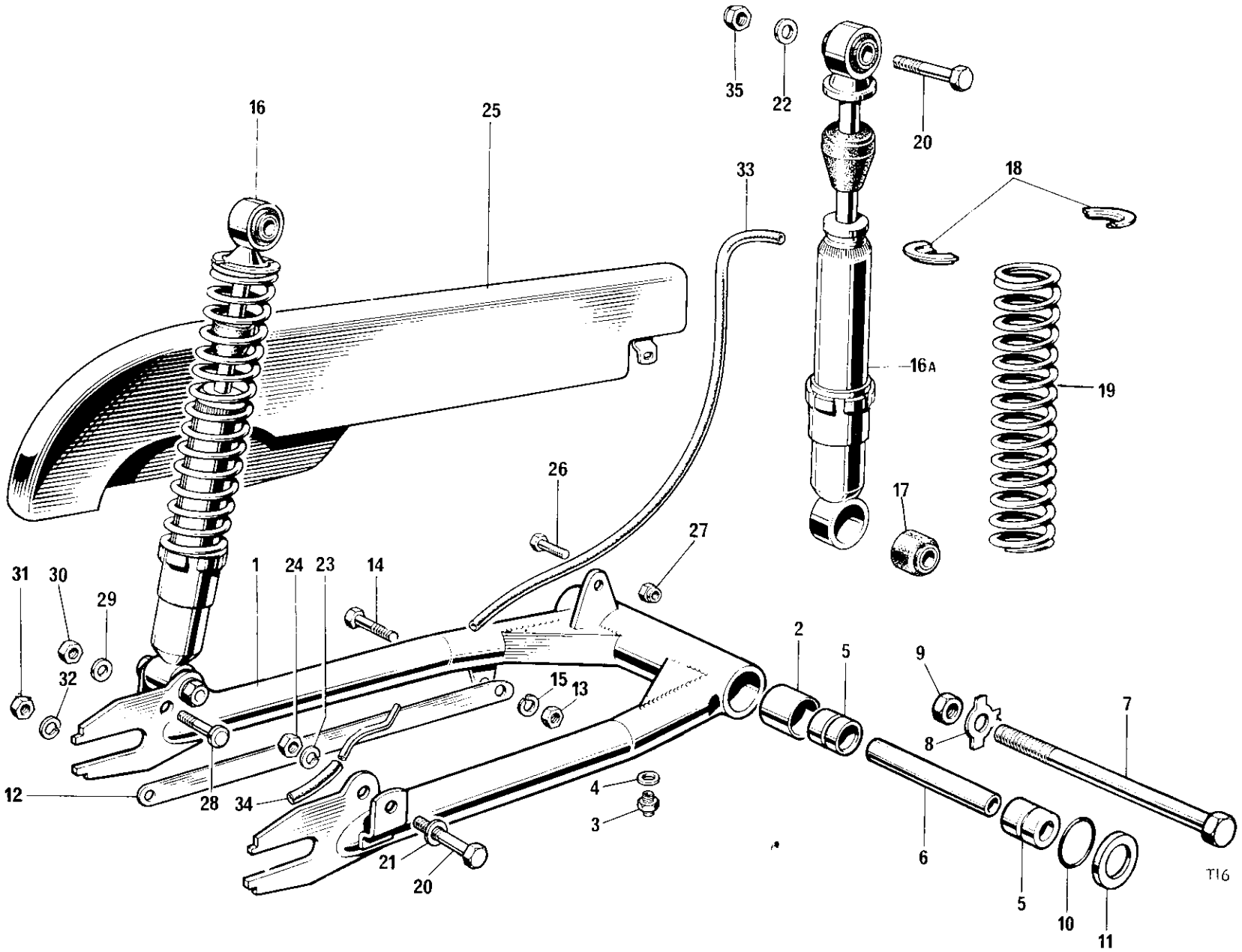

Fig. 15. SWINGING FORK AND SUSPENSION UNITS

Ref. No.	Part No.	DESCRIPTION	QUANTITY	REMARKS

SWINGING FORK AND SUSPENSION UNITS

1	F10045	SWINGING FORK	1
2	F6042	Bush	2
3	NW100	Grease nipple	1
4	WE170	Fibre washer	1
5	F6821	Bobbin	2
6	F5313	Distance tube	1
7	S620	S/arm bolt	1
8	F5944	Tab washer	1
9	S545	Nut	1
10	F8090	"O" ring	2
11	F7848	Oil seal housing	2
12	F11564	Torque stay	1
13	14–1304	Nut	1
14	W3591	Bolt ($\frac{27}{32}$ in.)	1
15	99–0046	Spring washer	1
16	D2294	SUSPENSION UNIT 64052089	2
16a	Ref. only	Damper unit only 64052090	2
17	99–0122	Bonded bush 64533645	4
18	99–0107	Spring retainer 9054/171	4
19	99–1139	Spring (110 lbs.) 64544754	2
20	14–0235	Bolt, top and bottom (2 in. U.H.)	4
21	S25–3	Washer, bottom bolt	2
22	S25–2	Washer, top bolt	6
23	S26–1	Spring washer, bottom bolt	2
24	14–1303	Nut	2
25	F9383	Rear chainguard	1
26	14–0113	Front pivot bolt ($\frac{5}{8}$ in. U.H.)	1
27	14–0702	Self-locking nut	1
28	F9387	Bolt, rear chainguard to fork ($\frac{25}{32}$ in.)	1
29	S26–3	Washer	1
30	14–0302	Nut	1
31	14–0304	Nut	1
32	PCW73A	Washer	1
33	F7532	Long chain oiler pipe	1
34	F9997	Short chain oiler pipe	1
35	14–1303	Nut	2

© HDT 2001

© HDT 2001

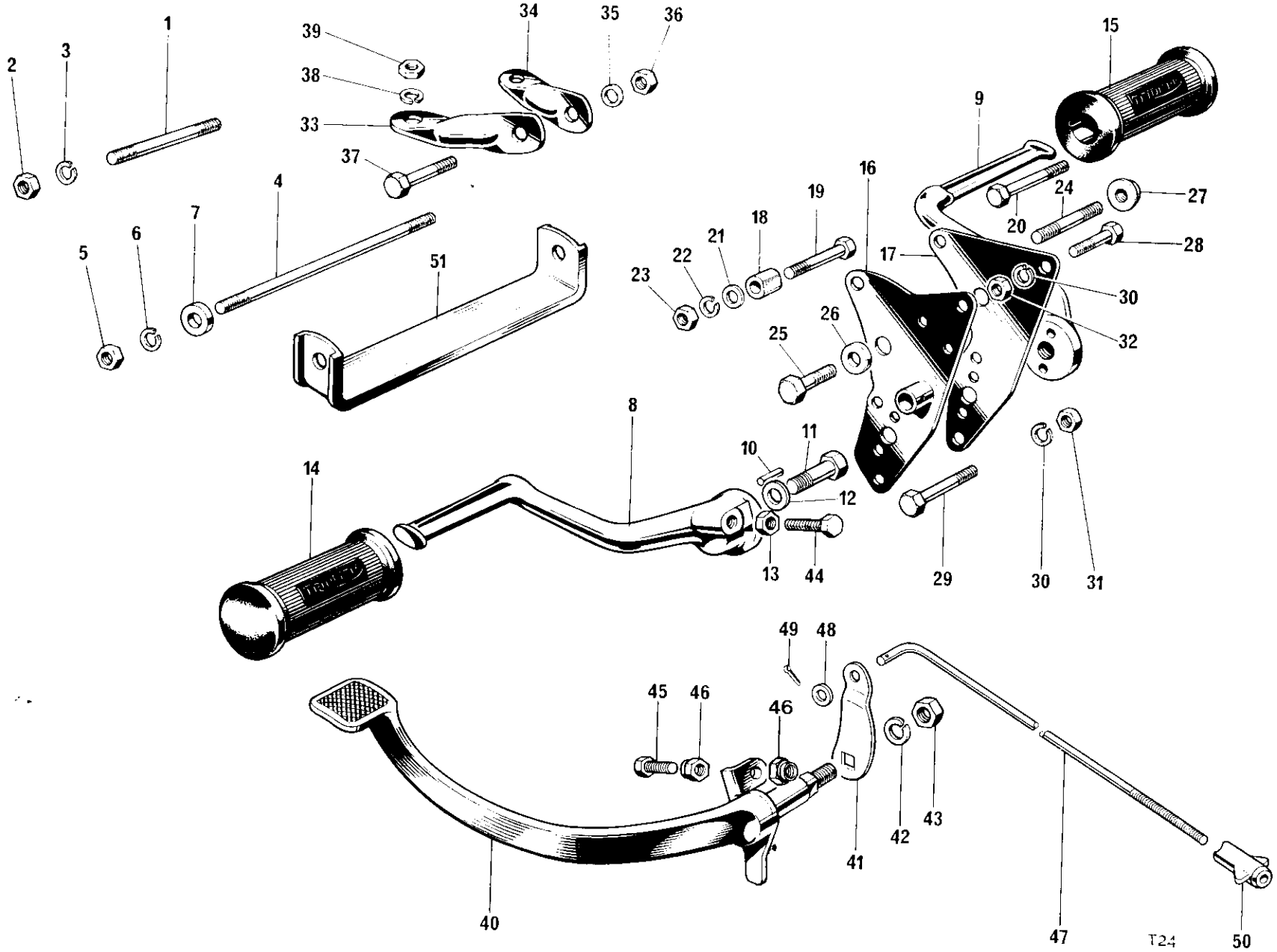

Fig. 16. ENGINE UNIT FITTINGS AND FOOTRESTS

Ref. No.	Part No.	DESCRIPTION	QUANTITY	REMARKS

ENGINE UNIT FITTINGS AND FOOTRESTS

1	S571	Stud, front engine to frame ($3\frac{7}{8}$ in. O.A.)	1	
2	14–0304	Nut, stud	2	
3	99–0046	Spring washer	2	
4	S572	Stud (bottom) engine to frame ($10\frac{1}{2}$ in. O.A.)	1	
5	14–0304	Nut, stud	2	
6	99–0046	Spring washer	2	
7	F5532	Spacer, bottom engine fixing	1	
8	F9623	Drive side footrest	1	
9	F9624	Timing side footrest	1	
10	F5943	Peg	4	
11	S1969	Bolt, footrest ($1\frac{1}{8}$ in. U.H.)	2	
12	F8243	Washer, footrest stud	2	
13	14–0401	Locknut	1	
14	F9279	Footrest rubber D.S.	1	
15	F9630	Footrest rubber T.S.	1	
16	F11597	Rear engine plate D.S.	1	
17	F11594	Rear engine plate T.S.	1	
18	F11598	Spacer D.S. rear engine plate	2	
19	14–0222	Bolt, D.S. rear engine plate to engine ($2\frac{1}{4}$ in. U.H.)	2	
20	14–0221	Bolt, T.S. rear engine plate to engine (2 in. U.H.)	2	
21	S25–3	Washer, rear engine plate to engine	4	
22	S26–3	Spring washer	4	
23	14–1302	Nut	4	
24	S548	Stud, T.S. pivot lug to engine plate ($1\frac{3}{8}$ in. O.A.)	1	
25	14–0132	Bolt, D.S. pivot lug to engine plate	1	
26	F3770	Washer	1	
27	F7389	Nut	2	
28	14–0128	Bolt, upper rear engine plate to frame ($\frac{3}{4}$ in. U.H.)	2	
29	14–0234	Bolt, lower rear engine plate to frame ($1\frac{3}{4}$ in. U.H.)	2	
30	S26–1	Spring washer	4	
31	14–1303	Nut	2	
32	14–0403	Nut	2	
33	F9379	Torque stay engine R.H.	1	
34	F9378	Torque stay engine L.H.	1	
35	S25–2	Washer	2	
36	14–0302	Nut	2	
37	14–0237	Bolt, torque stay to frame ($2\frac{1}{4}$ in. U.H.)	1	
38	S25–2	Washer	2	
39	14–1303	Nut	1	
40	F9635	Rear brake pedal	1	
41	F6064	Lever	1	
42	S26–1	Spring washer	1	
43	14–0303	Nut	1	
44	14–0106	Stop bolt (1 in. U.H.)	1	
45	14–0103	Adjuster, stoplamp switch ($\frac{3}{4}$ in. U.H.)	1	
46	14–0401	Nut, adjuster	2	
47	F7386	Brake rod	1	
48	S25–13	Washer	1	
49	——	Split pin, ($\frac{1}{16}$ in. x $\frac{3}{8}$ in.)	Reference only	
50	F7387	Adjuster nut	1	
51	F9529	Oil pipe retaining strap	1	

© HDT 2001

© HDT 2001

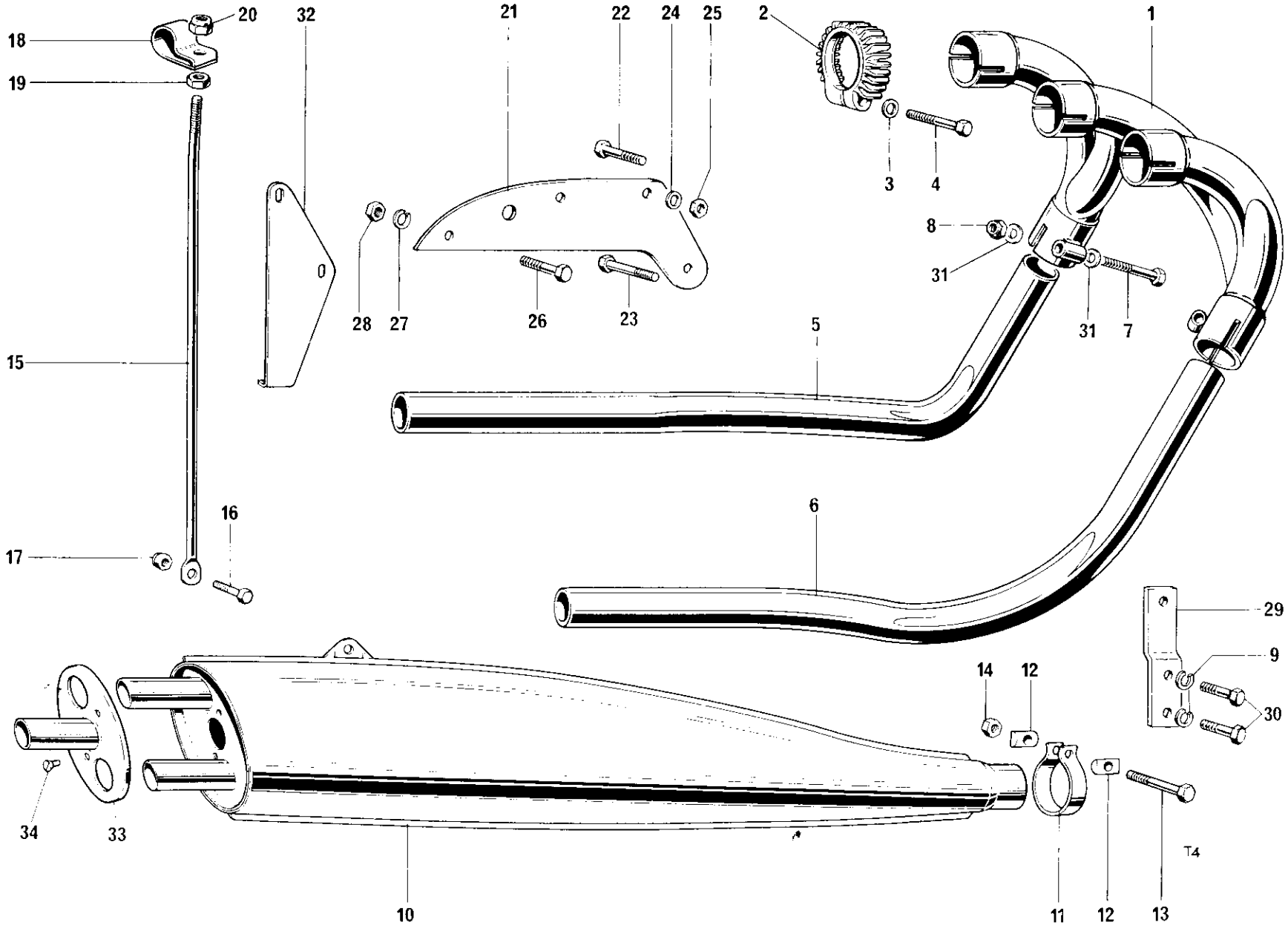

Fig. 17. EXHAUST PIPES AND SILENCERS

Ref. No.	Part No.	DESCRIPTION	QUANTITY	REMARKS

EXHAUST PIPES AND MANIFOLDS

1	E7597	Exhaust manifold	1
2	E6743	Finned clip	3
3	E410A	Hemispherical washer	3
4	E6744	Bolt ($1\frac{3}{16}$ in. U.H.)	3
5	E9463	Exhaust pipe D.S.	1
6	E9464	Exhaust pipe T.S.	1
7	14–0205	Bolt, exhaust pipe to manifold ($1\frac{1}{2}$ in. U.H.)	2
8	14–1201	Nut (Cleveloc) exhaust pipe to manifold	2
9	S26–3	Spring washer	4
10	E9036	Silencer D.S.	1
10	E9037	Silencer T.S.	1
11	E7512	Clip	2
12	E3768	'D' washer	4
13	14–0219	Bolt ($1\frac{1}{2}$ in. U.H.)	2
14	14–1302	Nut, Cleveloc	2
15	F11599	Strut	2
16	14–0101	Bolt, strut top and bottom ($\frac{1}{2}$ in. U.H.)	2
17	14–1301	Nut (Cleveloc)	2
18	F11600	Clip, silencer strut to frame	2
19	14–0302	Nut, strut	2
20	14–1902	Nyloc nut	2
21	E4711	Hanger, frame from silencer T.S. & D.S.	2
22	14–0115	Bolt ($\frac{7}{8}$ in. U.H.)	2
23	14–0116	Bolt (1 in. U.H.)	2
24	S25–3	Plain washer	2
25	14–0302	Nut	4
26	14–0101	Bolt, silencer to frame ($\frac{3}{4}$ in. U.H.)	2
27	S25–3	Spring washer	2
28	14–1302	Nut	2
29	E8902	Bracket D.S. and T.S. silencer	2
30	S1822	Bolt, bracket to silencer ($\frac{1}{2}$ in. U.H.)	4
31	S25–1	Washer	4
32	F9947	Centre stand stop plate	1
33	E9047	Silencer end plate	2
34	E9053	Screw	4

© HDT 2001

© HDT 2001

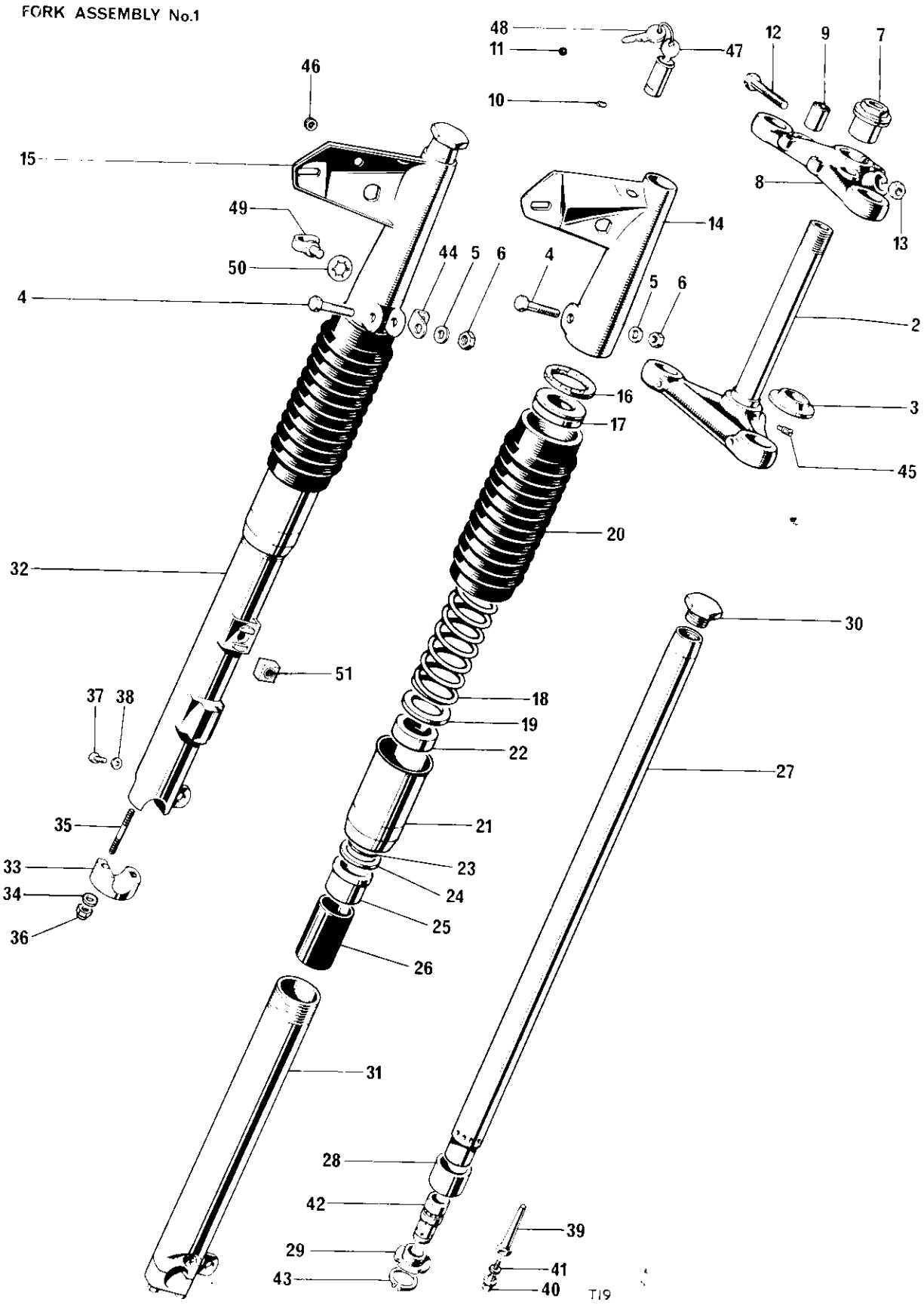

Fig. 18. TELESCOPIC FRONT FORK

Ref. No.	Part No.	DESCRIPTION	QUANTITY	REMARKS

TELESCOPIC FRONT FORK

1	H3911	FORK ASSEMBLY	1
2	H3659	Middle lug and stem	1
3	H439	Bottom cone	1
4	H2290	Pinch bolt ($2\frac{1}{4}$ in. U.H.)	2
5	S25–2	Plain washer	2
6	14–1303	Nut	2
7	H2108	Fork stem sleeve nut	1
8	H2293	Top lug	1
9	H1527	Bonded bush	2
10	S578	Grub screw	1
11	H2266	Sealing plug	1
12	S684	Pinch bolt ($1\frac{11}{16}$ in. U.H.)	1
13	S685	Seated nut	1
14	H2300	Left top cover	1
15	H2301	Right top cover	1
16	F4047	Cork washer	2
17	H1657	Spring abutment	2
18	H3651	Main spring (purple/white)	2
19	H1656	Plain washer	2
20	H3635	Telescopic gaiter	2
21	H3633	DUST EXCLUDER SLEEVE NUT	2
22	H1500	Oil seal	2
23	H2119	"O" ring	2
24	H431	Plain washer	2
25	H441	Top bearing	2
26	H1896	Damping sleeve	2
27	H3904	Stanchion	2
28	H443	Lower bearing	2
29	H2091	Bearing nut	2
30	H2245	Cap nut	2
31	H3921	LEFT BOTTOM MEMBER C/W CAP	1
32	H3922	RIGHT BOTTOM MEMBER C/W CAP	1
33	H1844	Spindle cap	2
34	E3446	Plain washer	4
35	S2024	Stud	4
36	14–1202	Nut, self locking	4
37	H3894	Drain plug	2
38	H3893	Fibre washer	2
39	H2090	Restrictor	2
40	H2126	Flanged bolt ($\frac{23}{32}$ in. U.H.)	2
41	H1062	Aluminium washer	2
42	H2154	Shuttle valve	2
43	H2127	Circlip	2
44	H3682	Bracket front brake cable	1
45	H2107	Locating pin	1
46	F6784	Grommet for control cables	2
47	F6738	Lock c/w 2 keys	1
48	D623	Key (state serial number)	2
49	H2270	Cable retainer	1
50	F8245	Starlock washer	1
51	H3926	Square nut	2

© HDT 2001

© HDT 2001

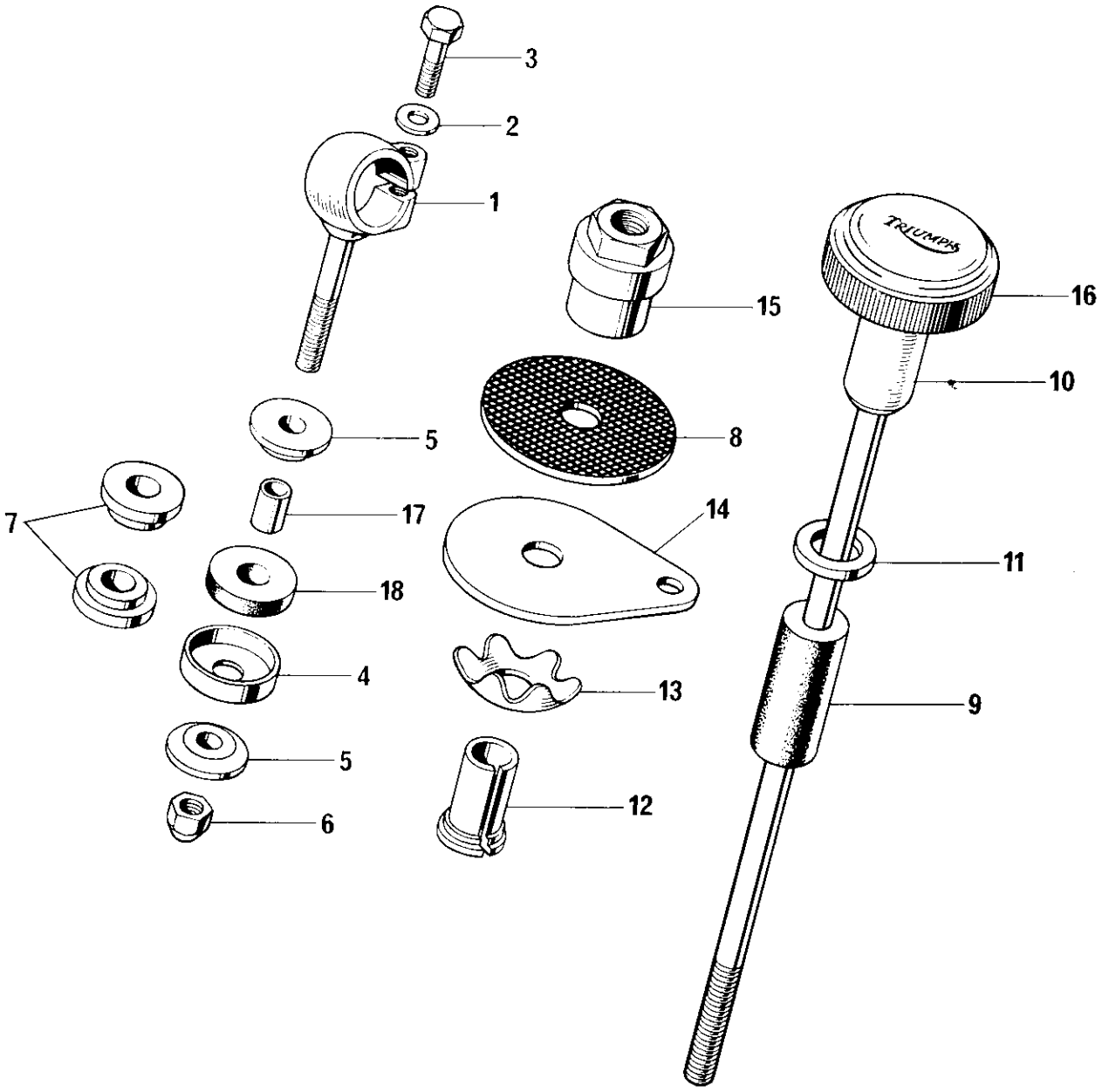

Fig. 19. HANDLEBAR MOUNTINGS AND STEERING DAMPER

Ref. No.	Part No	DESCRIPTION	QUANTITY	REMARKS

HANDLEBAR MOUNTINGS AND STEERING DAMPER

1	H2291	Handlebar eyebolt	2	
2	F1335	Plain washer	2	
3	S589	Bolt ($1\frac{1}{8}$ in. U.H.)	2	
4	H2221	Cup	2	
5	H1529	Hemispherical washer	4	
6	14–1903	Self-locking nut	2	
7	H1616	Solid bush for handlebar mounted windscreen	available	
8	H435	Friction disc	1	
9	H1618	Rubber sleeve	1	
10	H3602	Steering damper rod c/w knob	1	
11	H565	Plain washer	1	
12	H3601	Adjuster sleeve	1	
13	H95	Spring plate	1	
14	H1797	Anchor plate	1	
15	H2108	Sleeve nut	1	
16	H3604	Nameplate	1	
17	H1581	Distance piece	2	
18	H1580	Rubber	2	

© HDT 2001

© HDT 2001

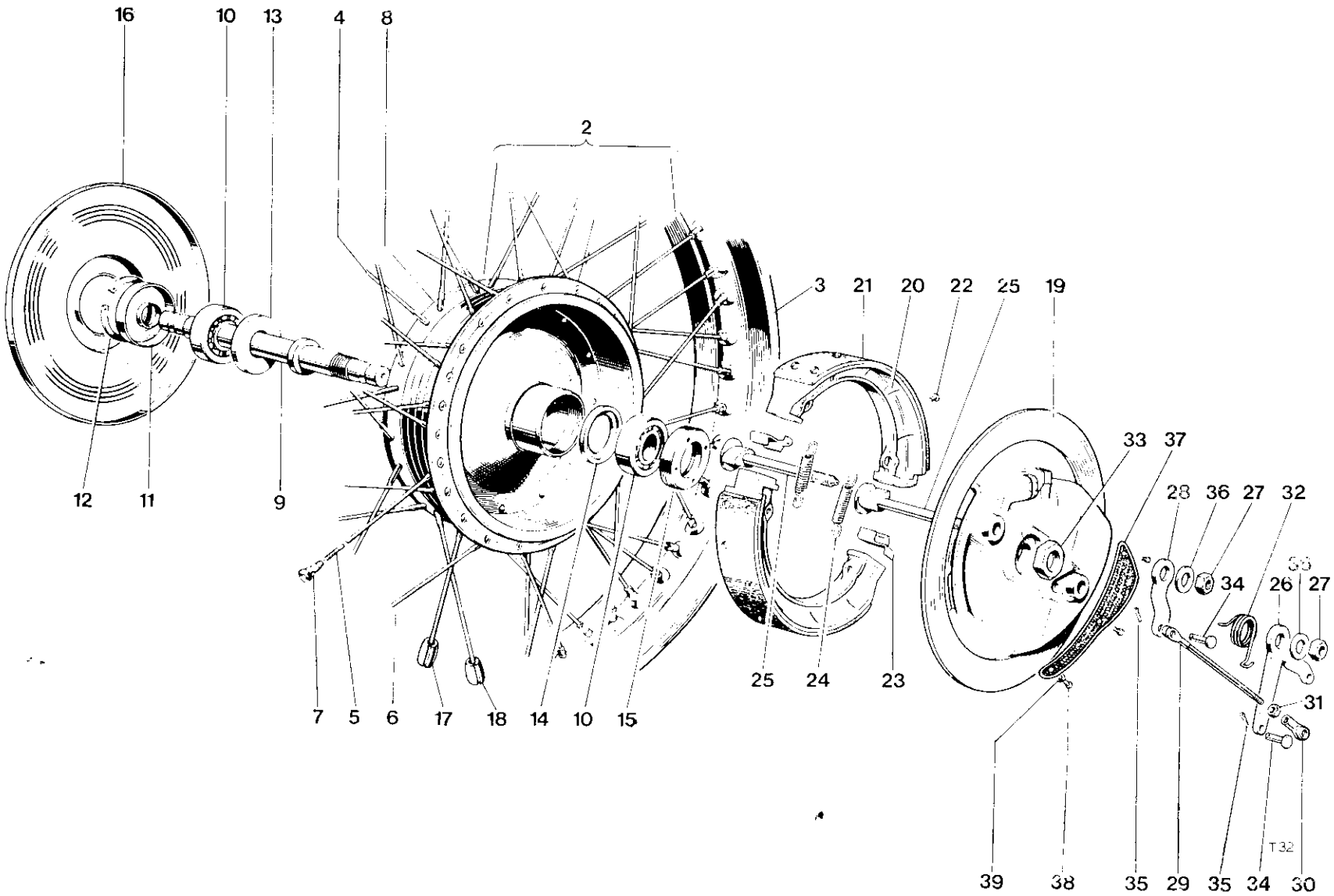

Fig. 20. FRONT WHEEL

Ref. No.	Part No.	DESCRIPTION	QUANTITY	REMARKS

FRONT WHEEL

1	W3458	FRONT WHEEL COMPLETE	1	
2	W1721	RIM, SPOKES AND HUB ASSEMBLY	1	
3	W1230	Front wheel rim (WM2-19)	1	
4	W1328	Spoke (8/10G x $5\frac{5}{8}$ in. straight)	20	
5	W1709	Spoke (8/10G x $4\frac{25}{32}$ in. 78°)	10	
6	W1709	Spoke (8/10G x $4\frac{7}{8}$ in. 100°)	10	
7	S79–2	Spoke nipple	40	
8	W1722	Hub and brake drum	1	
9	W3582	Wheel spindle	1	
10	W653	Bearing	2	
11	W1237	Dust cover	1	
12	T280	Circlip	1	
13	W3337	Bearing support ring	1	
14	W1481	Grease retainer	1	
15	W582	Retaining ring	1	
16	W3460	Cover plate	1	
17	W1197	Balance weight, $\frac{1}{2}$ oz.	as required	
18	W1198	Balance weight, 1 oz.	as required	
19	W3461	BRAKE ANCHOR PLATE ASSEMBLY	1	
20	W1996	BRAKE SHOE C/W LINING	2	
21	Reference only	Brake lining	1	Each shoe
22	Reference only	Brass rivet	8	Each shoe
23	W2026	Thrust pad...	2	
24	W135	Shoe return spring	2	
25	W2001	Brake cam	1	
26	W3453	Brake cam lever (front)	1	
27	14–1303	Nut	2	
28	W3454	Brake cam lever (rear)	1	
29	W2003	Rod assembly...	1	
30	W2005	Fork end, threaded	1	
31	14–0401	Locknut	1	
32	W3522	Lever return spring	1	
33	S1995	Anchor plate nut	1	
34	WF32	Pivot pin	2	
35	——	Split pin ($\frac{1}{16}$ in. x $\frac{3}{8}$ in. long)	Reference only	
36	S25-6	Plain washer	2	
37	W1991	Anchor plate gauze (for air scoop)	1	
38	S1998	Taptite screw	3	
39	E2351	Washer for taptite screws	3	

© BDT 2001

© HDT 2001

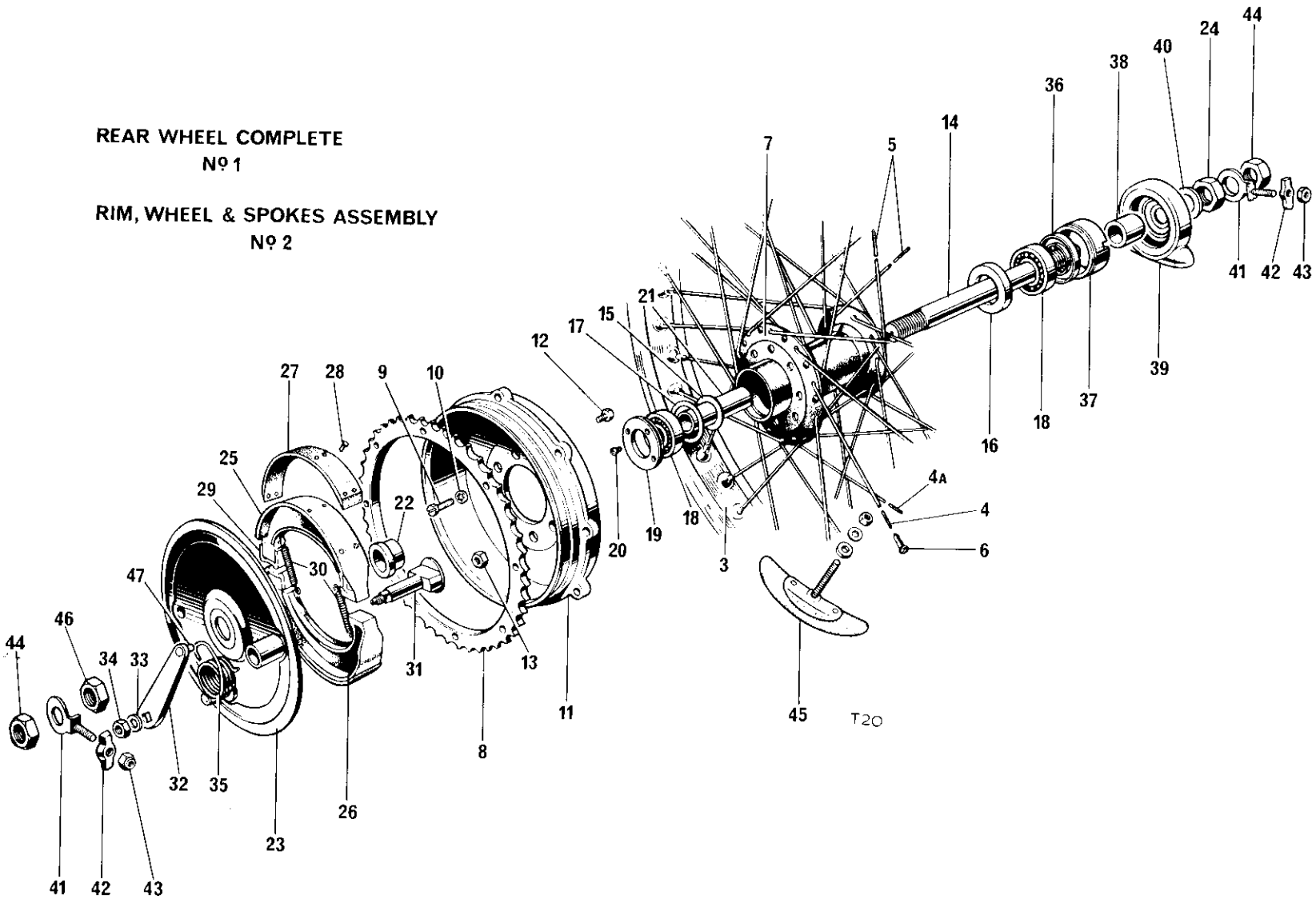

Fig. 21 REAR WHEEL

REAR WHEEL

Ref. No.	Part No.	DESCRIPTION	QUANTITY	REMARKS
1	W3620	REAR WHEEL COMPLETE	1	
2	W3594	RIM, SPOKES AND HUB ASSEMBLY	1	
3	W270A	Rear wheel rim W,3-19	1	
4	W1104	Spoke D.S.	10	
4A	W3575	Spoke D.S. inner	10	
5	W1106	Spoke T.S.	20	
6	S79–2	Spoke nipple	40	
7	W3586	Hub	1	
8	W3583	Sprocket 53T	1	
9	S2010	Bolt ($\frac{13}{16}$ in. U.H.)	8	
10	E1612	Serrated washer	8	
11	W3585	Brake drum	1	
12	S2011	Bolt ($\frac{11}{16}$ in. U.H.)	8	
13	14–1202	Self locking nut	8	
14	W3589	Wheel spindle	1	
15	W1474	Grease retainer (brake side)	1	
16	W1654	Grease retainer	1	
17	W1022	Backing ring	1	
18	W653	Bearing	2	
19	W3587	RETAINING RING	1	
20	W1710	Locking screw ($\frac{5}{16}$ in. U.H.)	1	
21	W1278	Distance tube	1	
22	W1024	Distance piece	1	
23	W3590	Brake anchor plate	1	
24	S2013	Nut anchor inner T.S.	2	
25	W1406	LEADING BRAKE SHOE C/W LINING	1	
26	W1407	TRAILING BRAKE SHOE C/W LINING	1	
27	NW243	Brake lining	2	Not serviced separately
28	W129	Brass rivet	16	
29	W1415	Thrust pad	2	
30	W135	Shoe return spring	2	
31	W3592	Brake cam	1	
32	W2015	Brake cam lever	1	
33	S25–6	Plain washer	1	
34	14–0403	Nut	1	
35	W1090	Lever return spring	1	
36	W1635	Grease retainer	1	
37	W3588	Speedometer adaptor	1	
38	W1477	Distance piece	1	
39	D637	Speedometer gearbox (MPH HEAD)	1	
40	W1280	Plain washer	1	
41	W2089	Rear wheel adjuster	2	
42	W1015	Adjuster end plate	2	
43	14–1902	Self locking nut	2	
44	S585	Spindle nut outer T.S. and D.S.	2	
45	WM3	Tyre security bolt	2	
46	S2014	Inner nut D.S.	1	
47	W1467	Pivot pin	1	

© HDT 2001

© HDT 2001

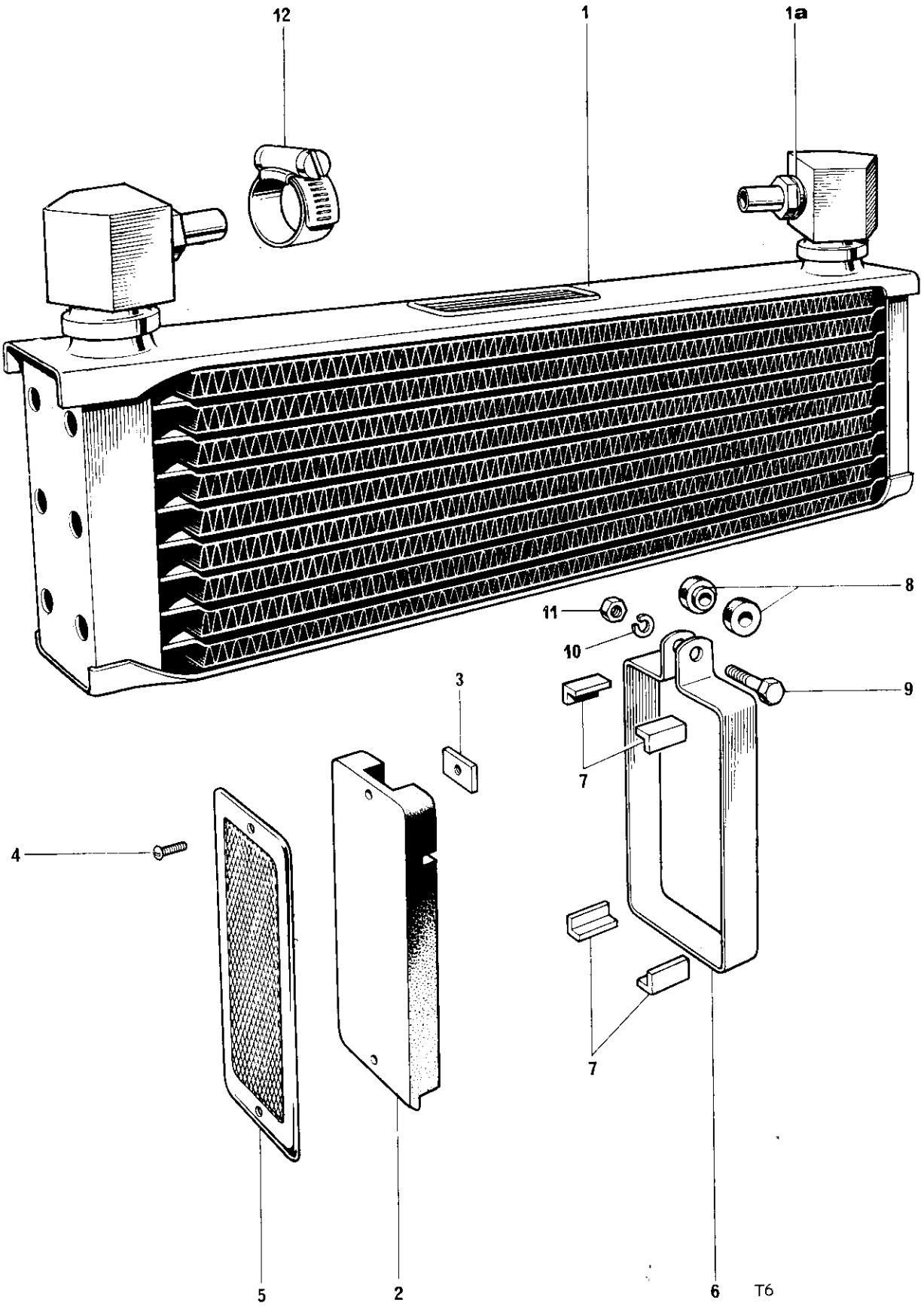

Fig. 22. OIL COOLER

Ref. No.	Part No.	DESCRIPTION	QUANTITY	REMARKS

OIL COOLER GROUP

1	F9315	Oil cooler, including unions	1	
1A	M10441	Washer (Cov. Rad.)	Reference only	
2	F9907	Reflector rubber and plate	2	
3	F9573	Reflector nut	4	
4	S1940	Reflector screw	4	
5	57160	Reflector	2	
6	F9317	Support strap	2	
7	F9322	Corner packing	8	
8	F9321	Rubber bush	4	
9	F9323	Clamp bolt ($\frac{55}{64}$ in. U.H.)	2	
10	E2351	Spring washer	2	
11	F4717	Nut	2	
12	D702	Clip	2	

© HDT 2001

© HDT 2001

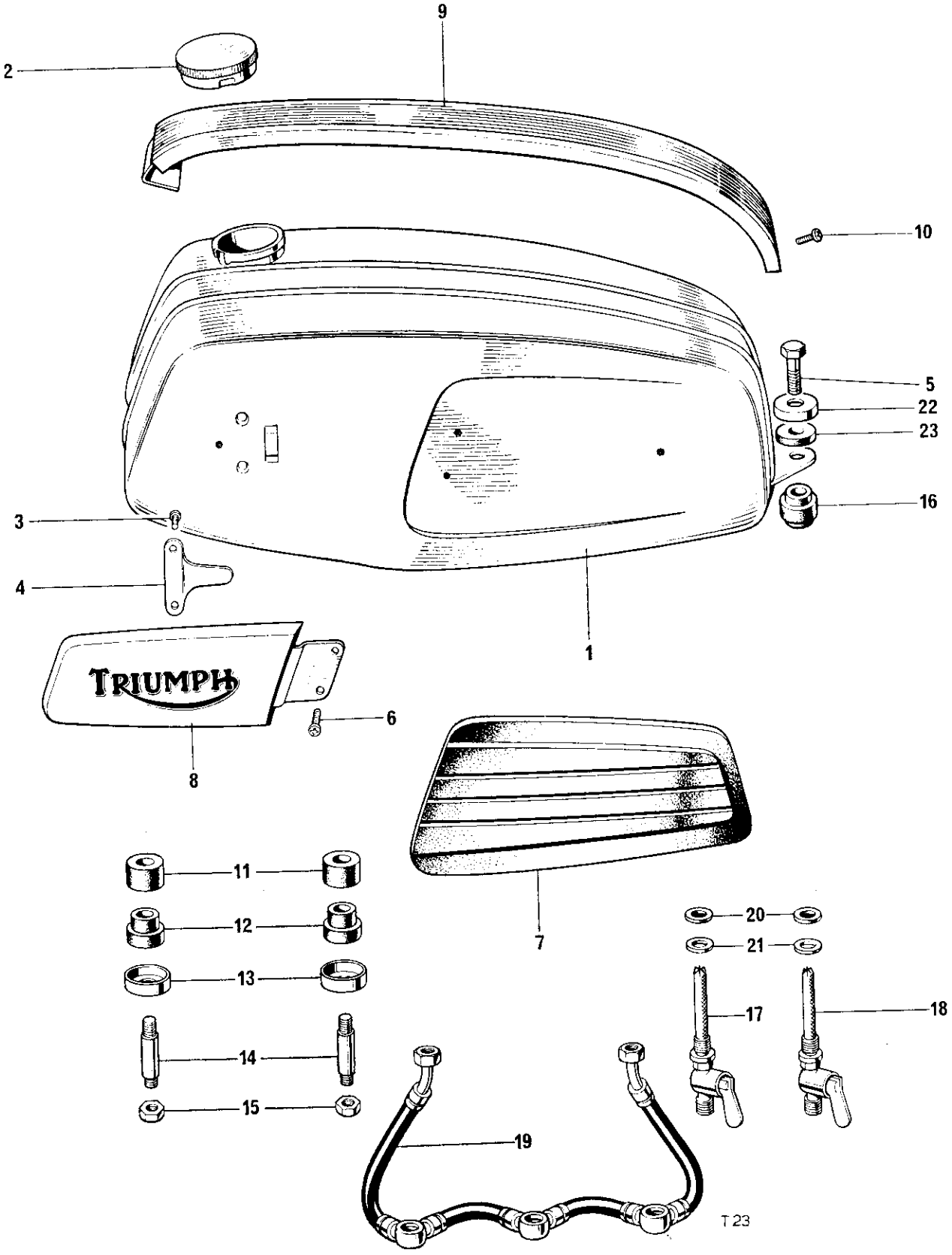

Fig. 23. PETROL (GAS) TANK

Ref. No.	Part No.	DESCRIPTION	QUANTITY	REMARKS

PETROL (GAS) TANK

1	F11338	PETROL TANK	1
not illus.	A56	Transfer "World Record Holder"	1
not illus.	A61	Transfer "Made in England"	1
2	F3220	Filler Cap	1
3	S1804	Screw, tank motif clip ($\frac{1}{4}$ in. U.H.)	4
4	F9381	Spring clip motif	2
5	F7388	Bolt for tank rear	1
6	F4715	Screw, motif ($\frac{13}{32}$ in. U.H.)	4
7	F9372	Knee grip D.S.	1
7	F9373	Knee grip T.S.	1
8	F9360	Tank motif D.S.	1
8	F9361	Tank motif T.S.	1
9	F11673	Centre band	1
10	E7354	Screw, centre band	2
11	F5228	Top rubber (front support)	2
12	F9543	Spigotted rubber (front support)	2
13	F3814	Bottom cup (front support)	2
14	S1883	Stud	2
15	14–1302	Nut	2
16	F5336	Rubber rear mounting...	1
17	F4971	Petrol tap (reserve) L.H.	1
18	F4972	Petrol tap (main) R.H.	1
19	F9436	Petrol pipe (assembly)	1
20	E7351	Tap seal	2
21	F10002	Steel washer	2
22	F3814	Cup for rear mounting	1
23	F967	Washer for rear tank fixing	1
not illus.	F4048	Joint washer, filler cap	1

© HDT 2001

© HDT 2001

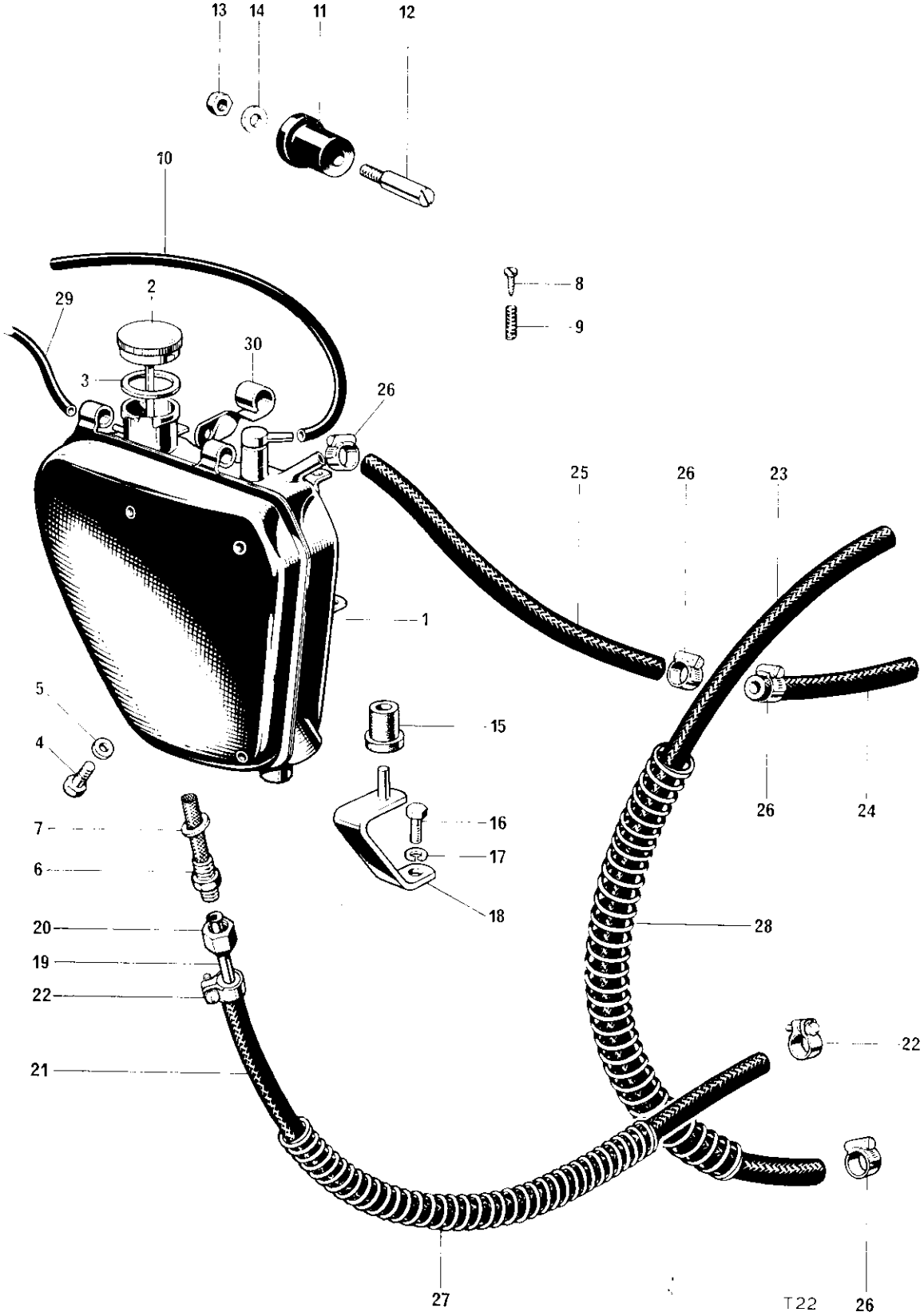

Fig. 24. OIL TANK

Ref. No.	Part No.	DESCRIPTION	QUANTITY	REMARKS

OIL TANK

1	F11761	Oil tank ...	1
Not illus.	A40 (D778)	Transfer (gilt) ...	1
Not illus.	A44 (D44)	Transfer (gilt) ...	1
Not illus.	A3	Transfer (gilt) ...	1
2	F9659	Filler cap ...	1
3	F4047	Joint washer ...	1
4	F5343	Drain plug ...	1
5	99–0048	Fibre washer ...	1
6	F9430	Filter ...	1
7	F1713	Fibre washer ...	1
8	F9435	Metering screw ...	1
9	F6874	Metering screw spring ...	1
10	F9664	Extension pipe, froth tower ...	1
11	F6673	Spigotted rubber ...	2
12	F7510	Peg, tank to frame ...	2
13	14–0301	Nut, tank to frame ...	2
14	S25–13	Washer, tank to frame ...	2
15	F6039	Bottom grommet ...	1
16	S1822	Bottom bolt ($\frac{1}{2}$ in. U.H.) ...	1
17	S26–3	Spring washer ...	1
18	F9588	Bottom bracket ...	1
19	F3655	Oil feed pipe top half ...	1
20	F3182	Union nut ...	1
21	E8904	Oil pipe flex tank, to engine ...	1
22	E6848	Oil pipe clip ...	2
23	E8905	Oil pipe engine to oil cooler ...	1
24	E8906	Rocker to oil cooler flexible pipe ...	1
25	E8907	Cooler to oil tank flexible pipe ...	1
26	D702	Clip oil return pipe ...	4
27	F9530	Feed pipe protection spring ...	1
28	F9531	Scavenge pipe spring ...	1
29	F9526	Rear chain oiler pipe ...	1
Not illus.	F9918	Clip, oil pipes to frame ...	2
30	F11549	Clip for choke cable ...	1

© HDT 2001

© HDT 2001

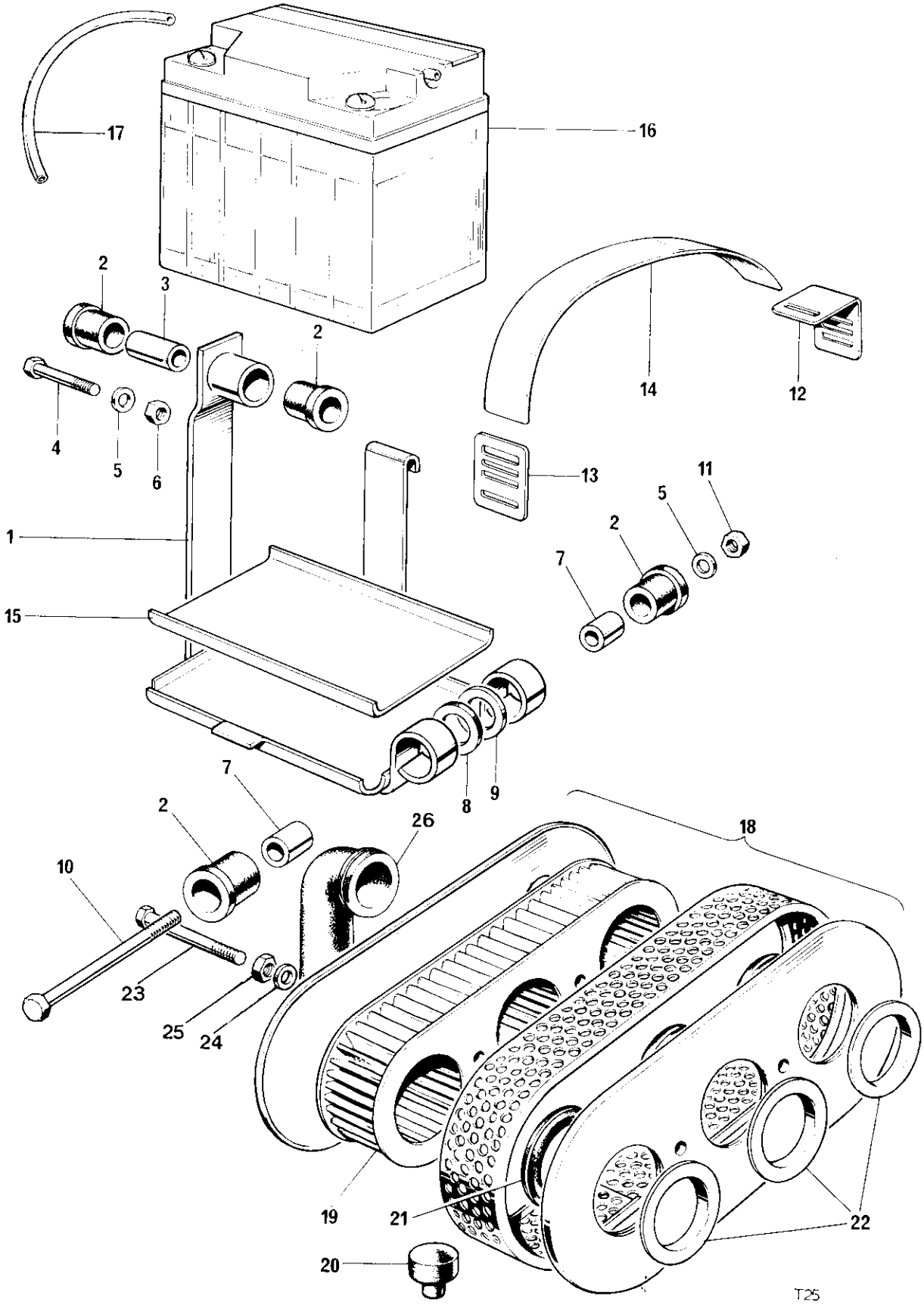

Fig. 25. BATTERY CARRIER AND AIR FILTER

Ref. No.	Part No.	DESCRIPTION	QUANTITY	REMARKS

BATTERY CARRIER AND AIR FILTER

1	F9343	Battery carrier	1	
2	F9351	Spigotted rubber bush	4	
3	F9349	Top distance tube	1	
4	14–0221	Top bolt (2 in. U.H.)	1	
5	S25–3	Washer	2	
6	14–0302	Nut	1	
7	F9350	Bottom distance tube	2	
8	F9352	Rubber washer	2	
9	F4299	Washer	2	
10	14–0228	Bolt (4 in. U.H.)	1	
11	14–0302	Nut	1	
12	F9354	Strap buckle top	1	
13	F9355	Strap buckle bottom	1	
14	F9353	Retaining strap	1	
15	F8091	Rubber battery tray	1	
Not illus.	A52	Transfer, positive earth	1	
16	99–0719	Battery PUZ5A (54027029)	1	
17	F7431	Battery vent pipe	1	
18	E9074	AIR CLEANER C/W ELEMENT	1	
19	E9138	Element	1	
20	F7835	Buffer	1	
21	F9562	Grommet	3	
22	E9586	Sleeve	3	
23	14–0213	Bolt (3½ in. U.H.)	1	
24	S602	Washer	2	
25	14–0401	Locknut	2	
26	F9563	Connector hose	1	

© HDT 2001

© HDT 2001

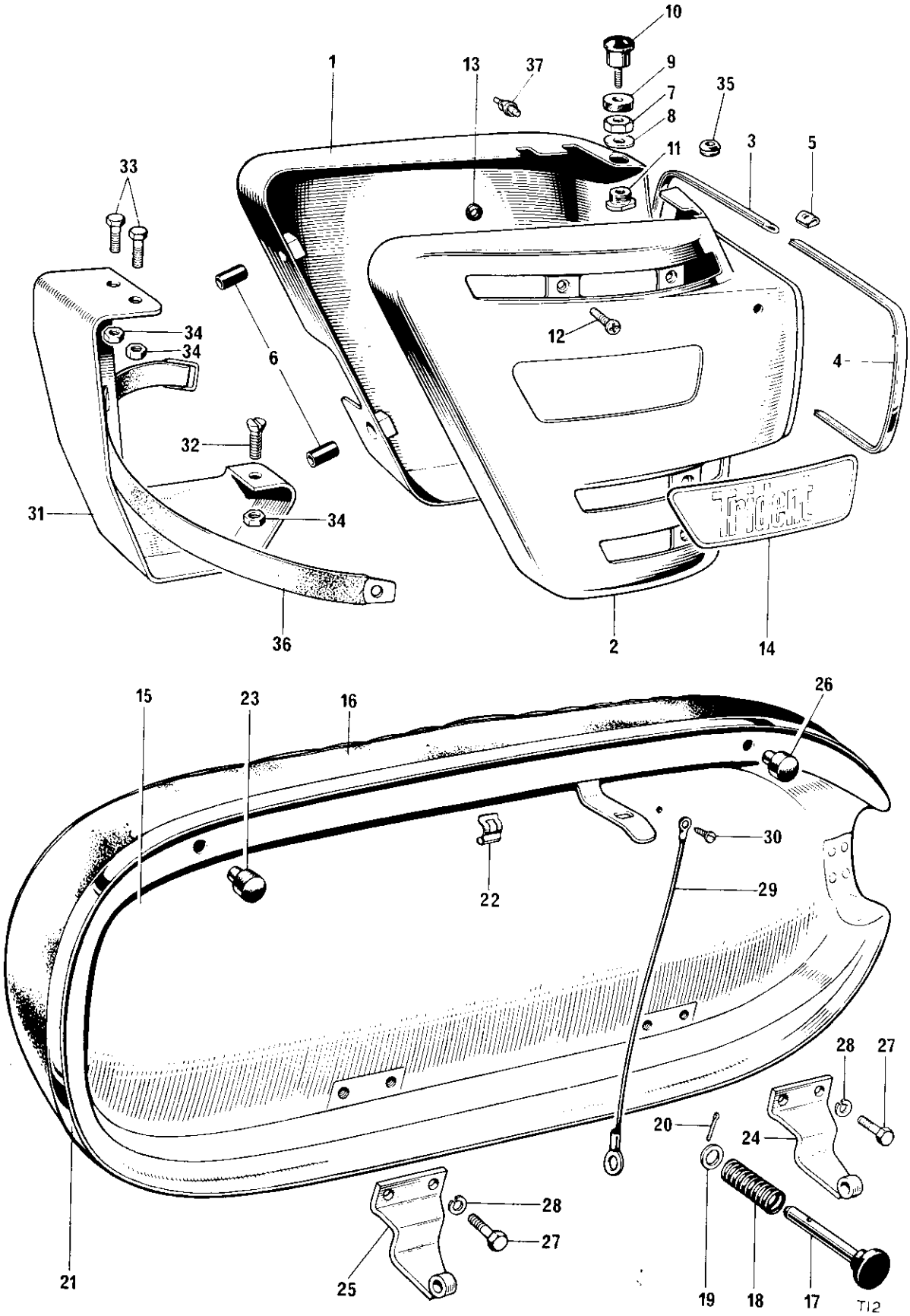

Fig. 26. PANELS AND TWINSEAT

Ref. No.	Part No.	DESCRIPTION	QUANTITY	REMARKS

PANELS AND TWINSEAT

1	F9362	D.S. Panel	1	
2	F9363	T.S. Panel	1	
3	F9591	Beading D.S.	1	
4	F9592	Beading T.S.	1	
5	F8631	Clip	6	
6	F6673	Grommet	2	
7	S1833	Lock nut	1	
8	S25–71	Washer	1	
9	F9442	Rubber spacer	1	
10	F9445	Release knob	1	
11	F9590	Boss	1	
12	14–2205	Screw T.S. panel to oil tank	4	
13	F9442	Rubber	4	
14	D1905	Transfer 'Trident' D.S.	1	
14	D1906	Transfer 'Trident' T.S.	1	
15	F9996	TWINSEAT	1	
16	F9715	Twinseat cover	1	
17	F7560	Knob	1	
18	F4228	Spring	1	
19	E1719	Washer	1	
20	——	Split pin ($\frac{3}{32}$ in.x$\frac{1}{2}$ in.)		Reference only
21	D696	Trim strip	1	
22	D697	Sprag	4	
23	F4898	Buffer	2	
24	F8026	Front hinge	1	
25	F7862	Rear hinge	1	
26	F7835	Buffer	2	
27	14–0101	Bolt, hinge ($\frac{1}{2}$ in. U.H.)	4	
28	S26–2	Spring washer	4	
29	D2087	Check wire	1	
30	D2381	Self tapping screw	1	
31	F9650	Toolbox	1	
32	14–0503	Screw, toolbox to battery carrier	1	
33	14–0102	Bolt	2	
34	14–1301	Nut	3	
35	F9770	Panel buffer	2	
36	F9749	Toolroll strap	1	
37	D2524	Clip, clutch cable	1	

© HDT 2001

© HDT 2001

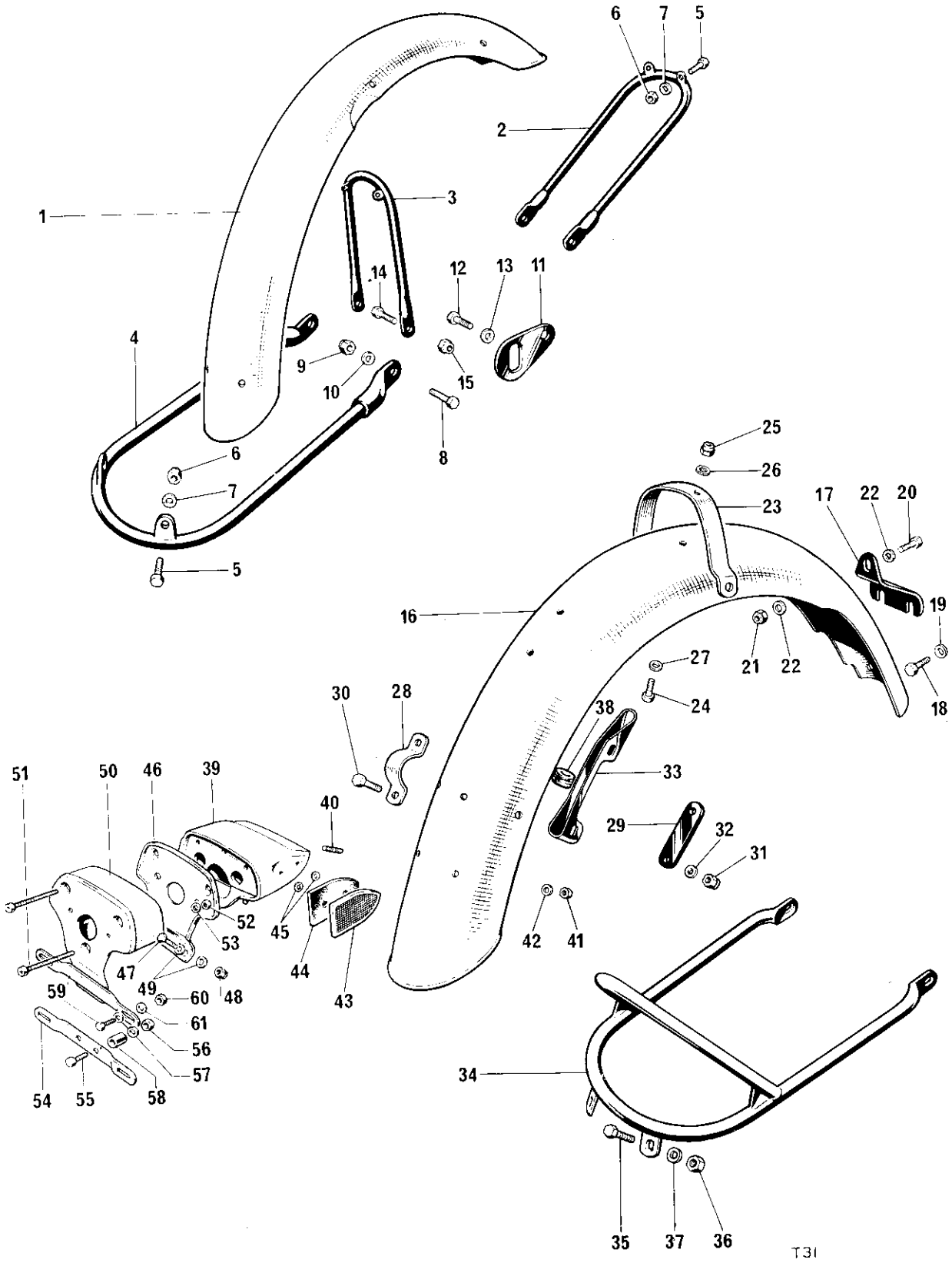

Fig. 27. MUDGUARDS (FENDERS)

Ref. No.	Part No.	DESCRIPTION	QUANTITY	REMARKS

MUDGUARDS (FENDERS)

1	H3882	Front mudguard	1	
2	H3663	Front stay	1	
3	H3664	Centre stay	1	
4	H3886	Bottom stay	1	
5	14–0101	Bolt ($\frac{1}{2}$ in. U.H.) } Stays to mudguard	6	
6	14–1201	Nut	6	
7	S25–1	Washer	6	
8	14–0115	Bolt ($\frac{7}{8}$ in. U.H.) } Bottom stay to Fork leg	2	
9	14–0702	Nut	2	
10	S25–3	Washer	2	
11	H1685	Bracket	2	
12	S1822	Bolt ($\frac{1}{2}$ in. U.H.) } Bracket to fork leg	2	
13	F4299	Washer	2	
14	14–0115	Bolt ($\frac{7}{8}$ in. U.H.) } Front & centre stays to bracket	2	
15	14–1302	Nut	2	
16	F11602	Rear mudguard	1	
17	F6851	Bracket (bottom front)	1	
18	S1822	Bolt ($\frac{1}{2}$ in. U.H.) } Bracket to pivot lug	2	
19	S26–3	Washer	2	
20	14–0101	Bolt ($\frac{1}{2}$ in. U.H.) } Bracket to mudguard	1	
21	14–1201	Nut	1	
22	F6310	Washer	1	
23	F6915	Bridge	1	
24	14–0102	Bolt ($\frac{5}{8}$ in. U.H.) } Bridge to mudguard	2	
25	14–1201	Nut	2	
26	S25–1	Washer	2	
27	F6310	Washer	2	
28	F5994	Clip-guard to frame rail	1	
29	F6031	Backing plate	1	
30	S1822	Bolt ($\frac{1}{2}$ in. U.H.) } Clip to mudguard	2	
31	14–1302	Nut	2	
32	S25–3	Washer	2	
33	F7826	Wiring protector	1	
34	F11571	Lifting handle	1	
35	14–0102	Bolt ($\frac{5}{8}$ in. U.H.) } Lifting handle to mudguard	2	
36	14–0201	Nut	2	
37	S25–1	Washer	2	
38	199001	Grommet, tail lamp lead	Reference only	
39	F8139	Tail lamp adaptor	1	
40	14–1401	Stud	1	
41	14–1201	Nut, self locking	1	
42	S25–1	Washer, plain	1	
43	99–1030	Reflector, red (57111)	2	
44	F8140	Rubber mat	2	
45	F8195	Push fix	4	
46	F12715	Tail lamp plate	1	
47	14–0101	Bolt ($\frac{5}{8}$ in. U.H.) } Plate to fender	2	
48	14–1301	Nut, self locking	2	
49	S25–1	Washer, plain	4	
50	F12753	Tail lamp support assembly	1	

© HDT 2001

© HDT 2001

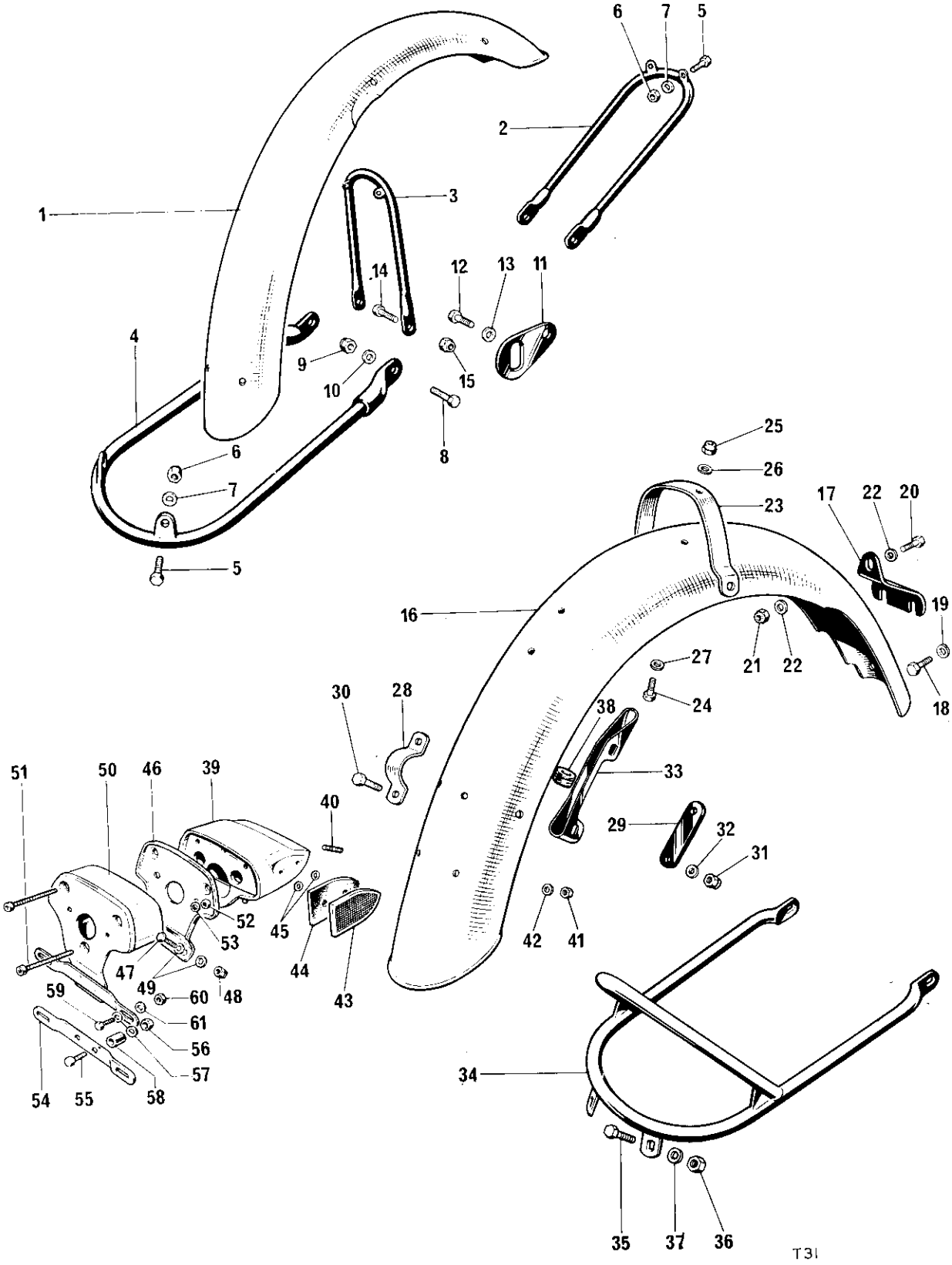

Fig. 28. MUDGUARDS (FENDERS)

Ref. No.	Part No.	DESCRIPTION	QUANTITY	REMARKS

MUDGUARDS (FENDERS) continued

51	D2516	Screw	Number plate support to tail lamp support	3
52	S5161	Nut, plain		1
53	GS299	Washer, shakeproof		1
54	E6850	Number plate bracket		1
55	14–0104	Bolt ($1\frac{1}{4}$ in. U.H.)	Number plate bracket to fender	2
56	14–1301	Nut, self locking		2
57	S25–1	Washer, plain		2
58	E5843	Spacer		2
59	14–0102	Bolt ($\frac{5}{8}$ in. U.H.)	Number plate attachment	4
60	14–1301	Nut, self locking		4
61	S25–1	Washer, plain		8

© HDT 2001

© HDT 2001

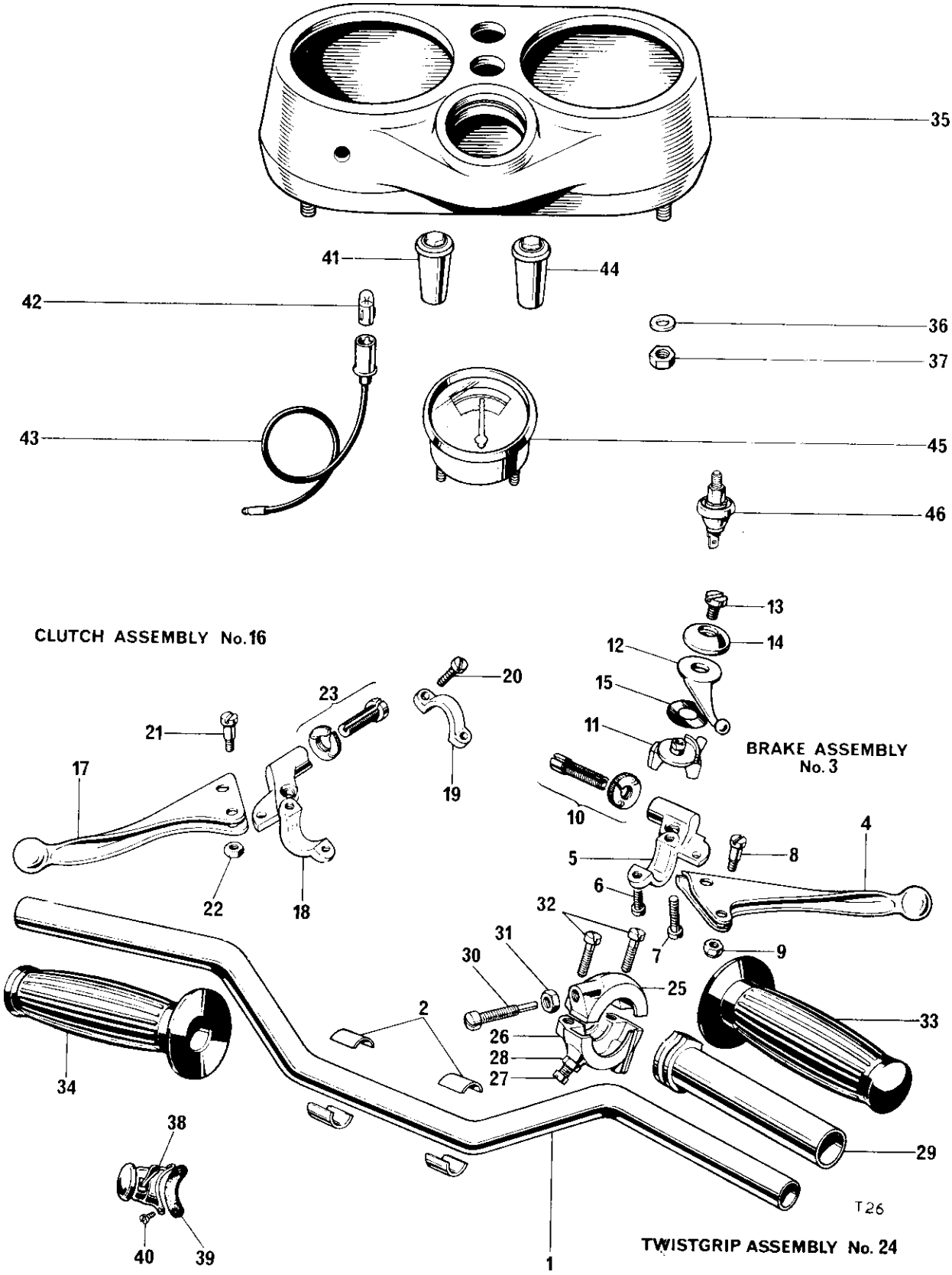

Fig. 29. HANDLEBARS, CONTROLS, BINNACLE AND OIL WARNING LIGHT

Ref. No.	Part No.	DESCRIPTION	QUANTITY	REMARKS

HANDLEBAR, BINNACLE, CONTROL LEVERS, OIL WARNING LIGHT

1	H1870	Handlebar	1	
2	H1425	Packing piece	4	
3	D2241	FRONT BRAKE LEVER ASSEMBLY (19/978)	1	
4	99–0262	Front lever (ball end) 18/754	1	
5	99–1093	Lever bracket 19/001	1	
6	99–0226	Screw 11/014	1	
7	99–0225	Screw 11/013	1	
8	99–0252	Fulcrum screw 18/087	1	
9	99–0250	Self locking nut 18/053	1	
10	99–1031	Cable adjuster and nut 18/1708/1709	1	
11	99–0234	Control body (12/619)	1	
12	99–0228	Lever 12/556	1	
13	12/607	Bolt	Reference only	
14	12/606	Cap	Reference only	
15	12/033	Spring washer	Reference only	
16	D2242	CLUTCH LEVER ASSEMBLY 19/952M	1	
17	99–1101	Clutch lever (ball end) 18/753	1	
18	99–1904	Clutch lever bracket 19/002	1	
19	99–0230	Clamp 12/595	1	
20	99–0226	Screw 11/014	2	
21	99–0252	Fulcrum screw 18/087	1	
22	99–0250	Self locking nut 18/053	1	
23	99–1031	Cable adjuster and nut 18/1708/1709	1	
24	99–1102	TWISTGRIP (364/011)	1	
25	364/013	Body top half	Reference only	
26	364/014	Body bottom half	Reference only	
Not illus.	16/008	Friction spring	Reference only	
27	16/009	Friction spring screw	Reference only	
28	16/010	Locknut	Reference only	
29	364/017	Rotor	Reference only	
30	364/020	Rotor stop screw	Reference only	
31	5/077	Locknut	Reference only	
32	99–0225	Screw 11/013	2	
33	H2125	Grip (black)	1	
34	D2017	Grip (black)	1	
35	H2297	Binnacle	1	
36	S25–1	Plain washer	4	
37	14–1201	Nut	4	
38	99–0555	Dip switch and horn 31563	1	
39	99–0630	Mounting pad 380459	1	
40	H1994	Screw	2	
41	99–0568	Warning light body (red) 38189	1	
42	99–0537	Bulb (2W.BA7S) 281	2	
43	54945043	Warning bulb holder	Reference only	
44	99–0569	Warning light body (green) 38191	1	
45	D1992	Ammeter type 2AR 36421	1	
46	D2133	Oil Warning light switch (5307/05)	1	

© HDT 2001

© HDT 2001

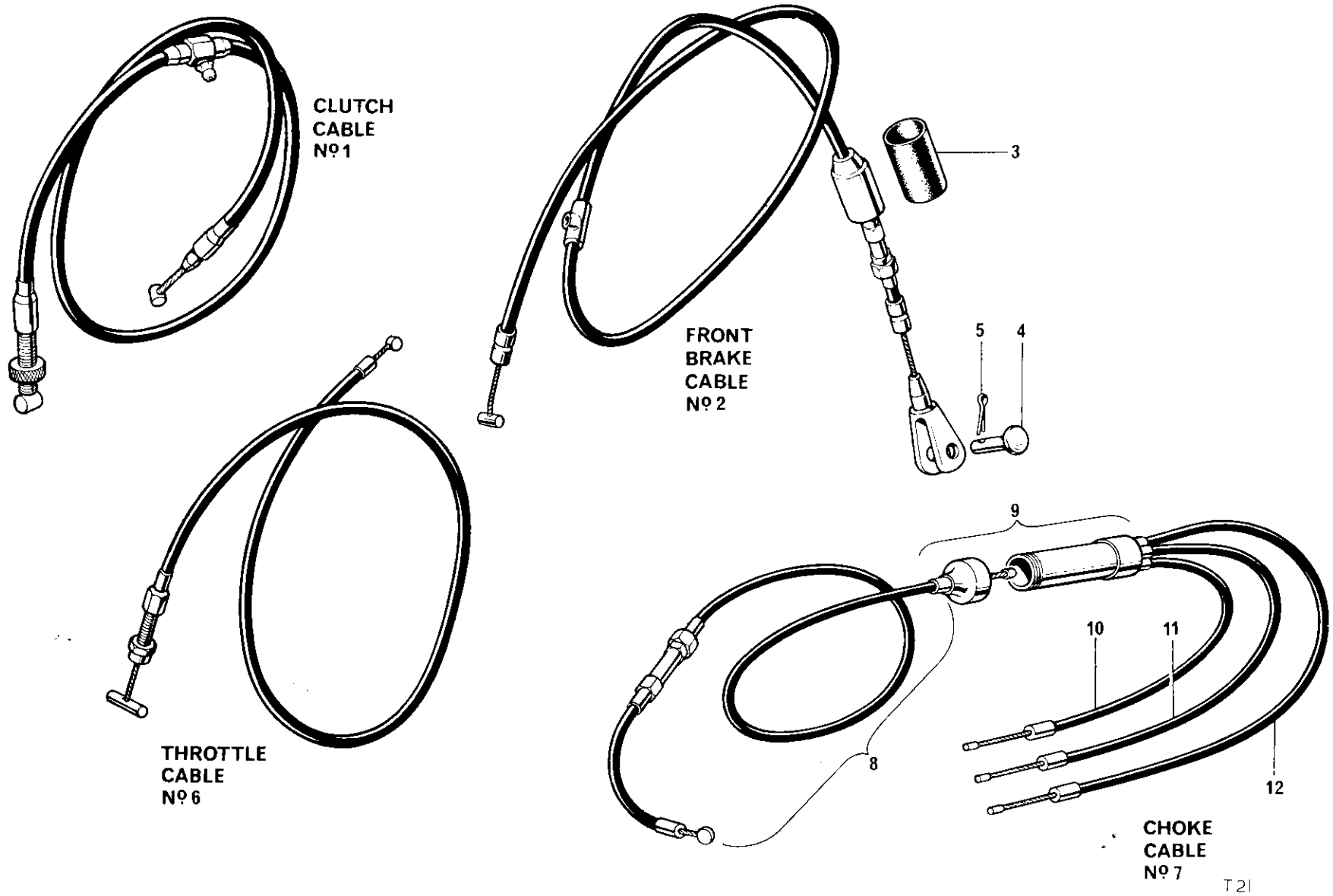

Fig. 30. CONTROL CABLES

Ref. No.	Part No.	DESCRIPTION	QUANTITY	REMARKS

CONTROL CABLES

1	D2445	Clutch cable	1	
2	D2076	FRONT BRAKE CABLE	1	
3	D2086	Cover, stop switch	1	
4	WF32	Pivot pin...	1	
5	——	Split pin	Reference only	
6	D890	Throttle cable	1	
7	D1983	CHOKE CABLE ASSEMBLY	1	
8	D1968	Cable, lever to junction box	1	
9	D1978	Junction box (244/2080)	1	
10	D2060	Cable, junction box to carburetter	1	
11	D2061	Cable, junction box to carburetter	1	
12	D2062	Cable, junction box to carburetter	1	

© HDT 2001

© HDT 2001

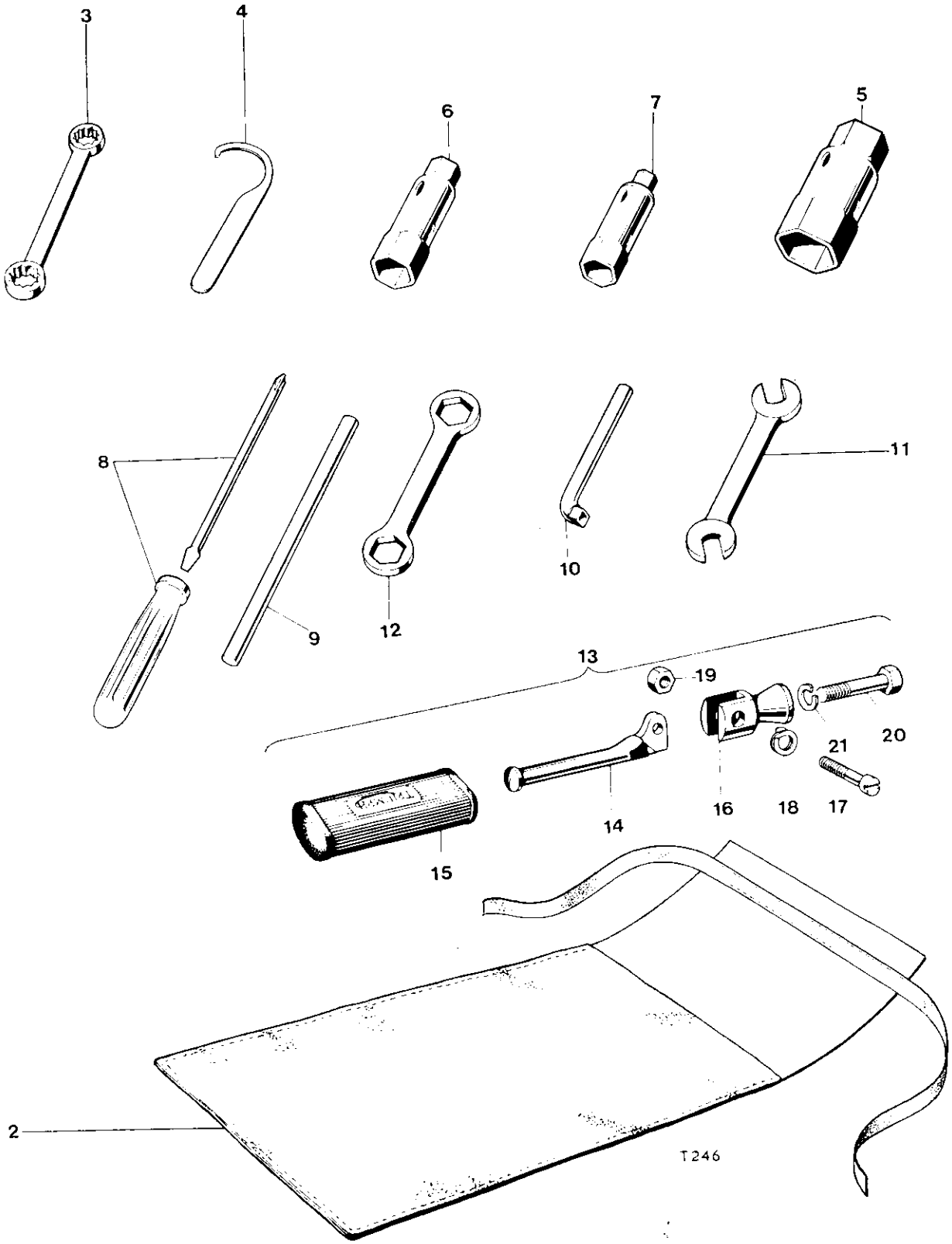

Fig. 31. TOOLKIT AND PILLION FOOTREST

Ref. No.	Part No.	DESCRIPTION	QUANTITY	REMARKS

TOOLKIT AND PILLION FOOTRESTS

1	D1912	TOOLKIT COMPLETE	1
2	D291	Tool roll	1
3	D1907	Ring spanner ($\frac{7}{16}$ in. x $\frac{1}{2}$ in. HEX.)	1
4	D2184	"C" spanner	1
5	D1908	Box spanner ($1\frac{1}{8}$ in. x $1\frac{5}{16}$ in.)	1
6	D1909	Box spanner ($\frac{5}{8}$ in. x $\frac{11}{16}$ in.)	1
7	D1910	Plug spanner	1
8	D767	Screwdriver complete	1
9	D1911	Tommy bar	1
10	D2020	Tappet spanner	1
11	D2084	Spanner $\frac{1}{2}$ in. x $\frac{7}{16}$ in. open ended AF	1
12	D2251	Ring spanner $1\frac{1}{8}$ in. x $1\frac{5}{16}$ in. Hex.	1
13	F9369	PILLION FOOTREST ASSEMBLY	2
14	F1694	Pedal	2
15	F1695	Rubber	2
16	F9370	Hanger	2
17	F9371	Pivot bolt	2
18	F2277	Thackeray washer	2
19	14–0302	Locknut	2
20	14–0127	Bolt (rest to silencer hanger) ($\frac{7}{8}$ in. U.H.)	2
21	S26–1	Spring washer	2

© HDT 2001

© HDT 2001

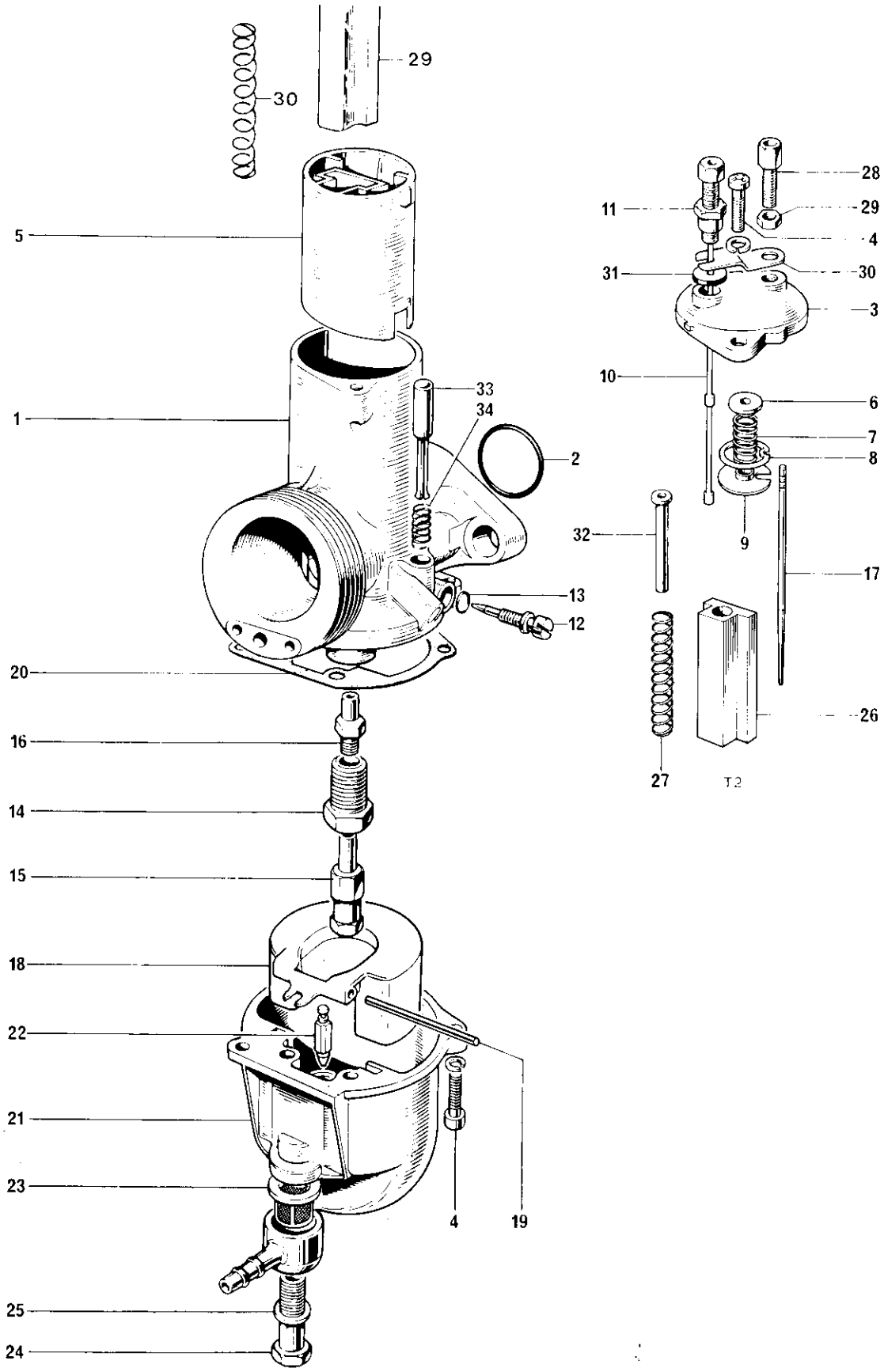

Fig. 32. AMAL CARBURETTER AND AIR CLEANER CONNECTIONS

Ref. No.	Part No.	DESCRIPTION	QUANTITY	REMARKS

AMAL CARBURETTERS

1	D1957	CARBURETTER TYPE 626 R.H. (Amal R626/14)	1	
1	D1985	CARBURETTER CENTRE (Amal R626/16)...	1	
1	D1986	CARBURETTER L.H. (Amal L626/15)	1	
2	99–0522	'O' ring seal 622/101	3	
3	99–1019	Mixing chamber top 622/097	1	Each Carburetter
4	99–0521	Screw 622/086	4	Each Carburetter
5	99–0506	Throttle valve (No. 3) 622/060	1	Each Carburetter
6	D1959	Top spring abutment	1	Each Carburetter
7	D1960	Spring	1	Each Carburetter
8	99–0510	Needle clip 622/067	1	Each Carburetter
9	D1987	Bottom spring abutment...	1	Each Carburetter
10	D1984	Throttle rod assembly	1	Each Carburetter
11	E9253	Locknut	1	Each Carburetter
12	99–0515	Pilot air screw 622/076	1	Each Carburetter
13	99–0520	Friction 'O' ring 622/082	1	Each Carburetter
14	99–0519	Jet holder 622/128	1	Each Carburetter
15	99–1020	Main jet (150) 376/100	1	Each Carburetter
16	99–1035	Needle jet (106) 622/122	1	Each Carburetter
17	99–1036	Needle (Standard) 622/124	1	Each Carburetter
18	99–0512	Float 622/069	1	Each Carburetter
19	99–0513	Float spindle 622/071	1	Each Carburetter
20	99–0514	Joint washer 622/073	1	Each Carburetter
21	99–0506	Float chamber 622/050	1	Each Carburetter
22	99–0511	Float needle 622/068	1	Each Carburetter
23	99–0438	Filter (376/093)	1	Each Carburetter
24	99–0517	Banjo bolt (622/078)	1	Each Carburetter
25	99–1100	Fibre washer (13/163)	1	Each Carburetter
26	99–1021	Air slide 622/062	1	Each Carburetter
27	99–0509	Spring 622/065	1	Each Carburetter
28	99–1024	Cable adjuster 4/035	1	Each Carburetter
29	99–0224	Locknut 5/077	1	Each Carburetter
30	99–1022	Clip 622/125	1	Each Carburetter
31	99–1023	Sealing rubber 622/126	1	Each Carburetter
32	99–1051	Air slide guide tube	1	Each Carburetter
33	622/089	Tickler pin	Reference only	
34	14/032	Tickler pin spring	Reference only	

© HDT 2001

© HDT 2001

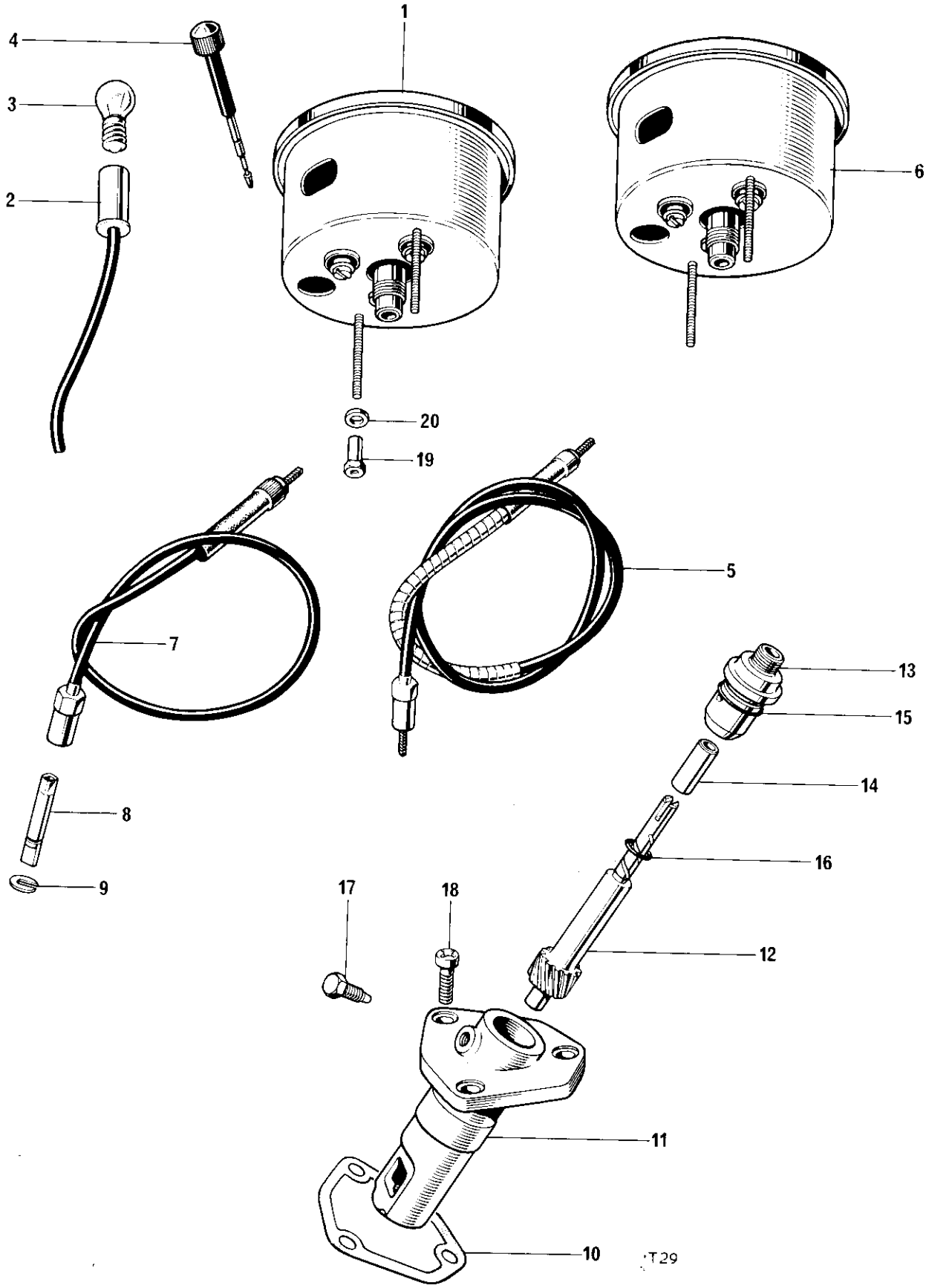

Fig. 33. SPEEDOMETER AND TACHOMETER

Ref. No.	Part No.	DESCRIPTION	QUANTITY	REMARKS

SPEEDOMETER AND TACHOMETER

1	D2394	Speedometer head MPH (SSM 5007/00)	1	
1	D2199	Speedometer head KPH (SSM 5001/12)	Available	
2	54953387	Bulbholder	Reference only	
3	643	Bulb	2	
4	99–0176	Trip control 41–148–203–10	1	
5	D1963	Speedometer cable 68 in. long	1	
6	D2396	Tachometer head (RSM 3003/13)	1	
7	D1903	Tachometer cable	1	
8	99–0173	Spade (31–371–398)	1	
9	D494	Circlip	1	
10	E11439	Joint washer, tacho drive	1	
11	E8740	Housing tacho driven gear	1	
12	E8741	Driven gear	1	
13	E8742	Tacho bearing housing	1	
14	E6124	Bush	1	
15	E3309	'O' ring	1	
16	E6299	'O' ring, driven gear	1	
17	E8744	Locating screw	1	
18	14–6605	Screw, housing to c/case ($\frac{7}{8}$ in. U.H.)	3	
19	H3632	Sleeve nut, speedometer fixing	4	
20	GS308	Washer	4	

© HDT 2001

© HDT 2001

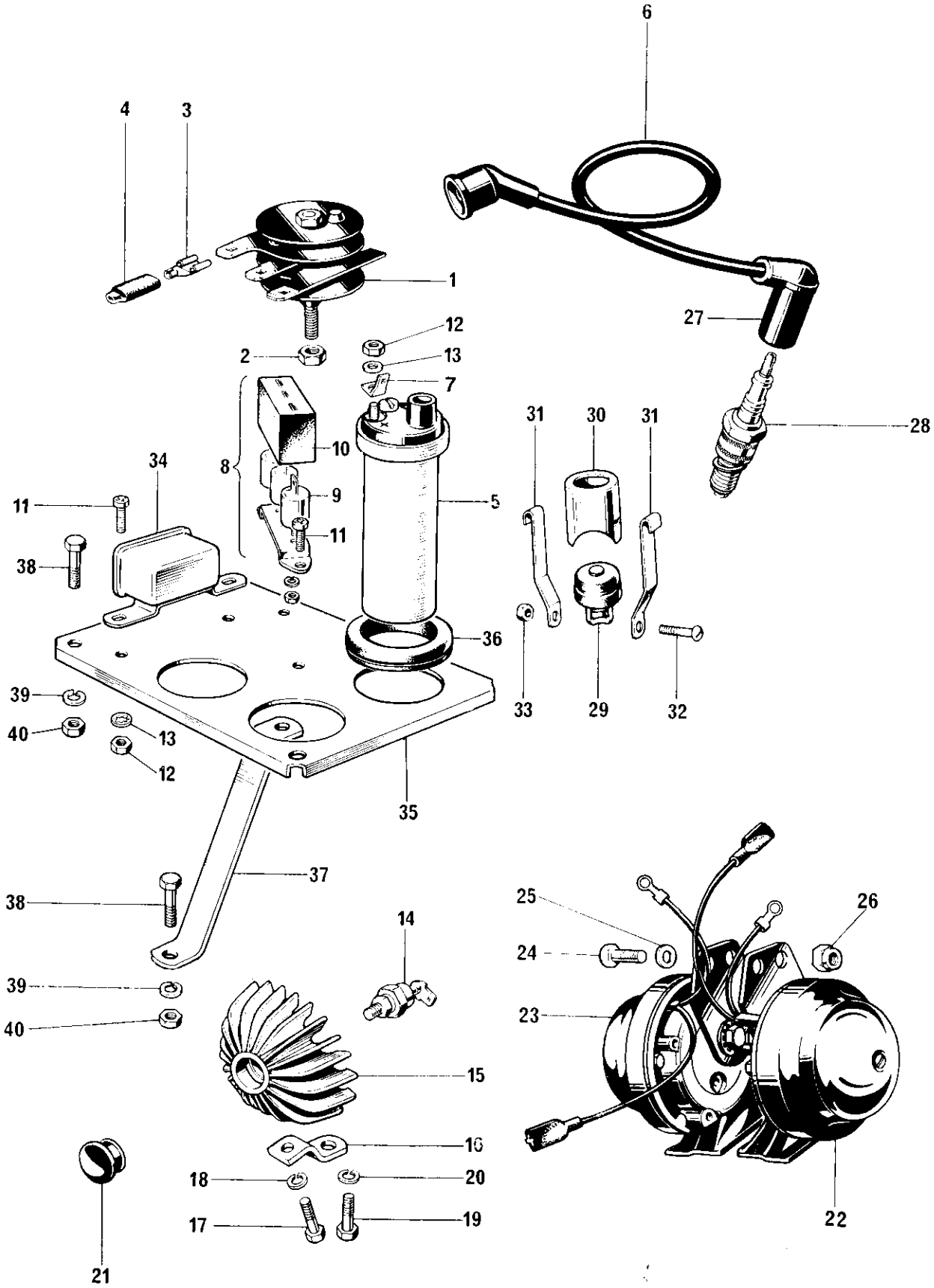

Fig. 34. IGNITION COILS, HORNS, RECTIFIER AND ZENER DIODE

Ref. No.	Part No.	DESCRIPTION	QUANTITY	REMARKS

IGNITION COILS, HORNS, RECTIFIER ZENER DIODE

1	D756	Rectifier (49072) 2DS506	1	
2	F5338	Nut (156596)	1	
3	99–0799	Lucar connector 54942078	as required	
4	99–0738	Insulating cover 54190042	as required	
5	D2203	Ignition coil Lucas 17M12 (45223)	3	
6	D2204	H.T. lead (7 mm. cable) NON RESISTIVE (54956435)	3	
7	D2068	Lucar blade terminal (54190038)	1	
8	D1935	CAPACITOR PACK (2 CP)	1	
9	99–0766	Capacitor 54420128	3	
10	99–0767	Cover 54418528	1	
11	F10033	Screw pack to plate and relay to plate	5	
12	F3799	Nut	4	
13	GS299	Shakeproof washer	4	
14	99–0590	Zener diode 49345	1	
15	H2237	Heat sink	1	
16	H2365	Bracket (sink to fork lug)	1	
17	14–6102	Bolt (bracket to heat sink) ($\frac{5}{8}$ in. U.H.)	1	
18	S26–2	Washer	1	
19	14–0113	Bolt bracket ($\frac{5}{8}$ in. U.H.)	1	
20	S26–3	Washer	1	
21	H2275	Plug, heat sink	1	
22	D2256	Horn, R.H. Windtone (Clearhooter P201)	1	
23	D2257	Horn, L.H. Windtone (Clearhooter P101)	1	
24	14–0103	Bolt, horn to bracket ($\frac{7}{8}$ in. U.H.)	4	
25	S25–1	Washer	4	
26	14–1201	Nut	4	
27	D1964	Spark plug cover	3	
28	D911	Spark plug N3	3	
29	D1937	Cut out switch type 151SA (35835)	1	
30	H2259	Cup	1	
31	H2034	Clip	2	
32	H687	Screw	1	
33	H745	Nut	1	
34	99–1022	Horn relay 33188 (6 RA)	1	
35	F9564	Platform	1	
36	F9561	Grommet	3	
37	F9565	Platform stay	1	
38	14–0101	Bolt	4	
39	S26–2	Washer	4	
40	14–0301	Nut	4	

© HDT 2001

© HDT 2001

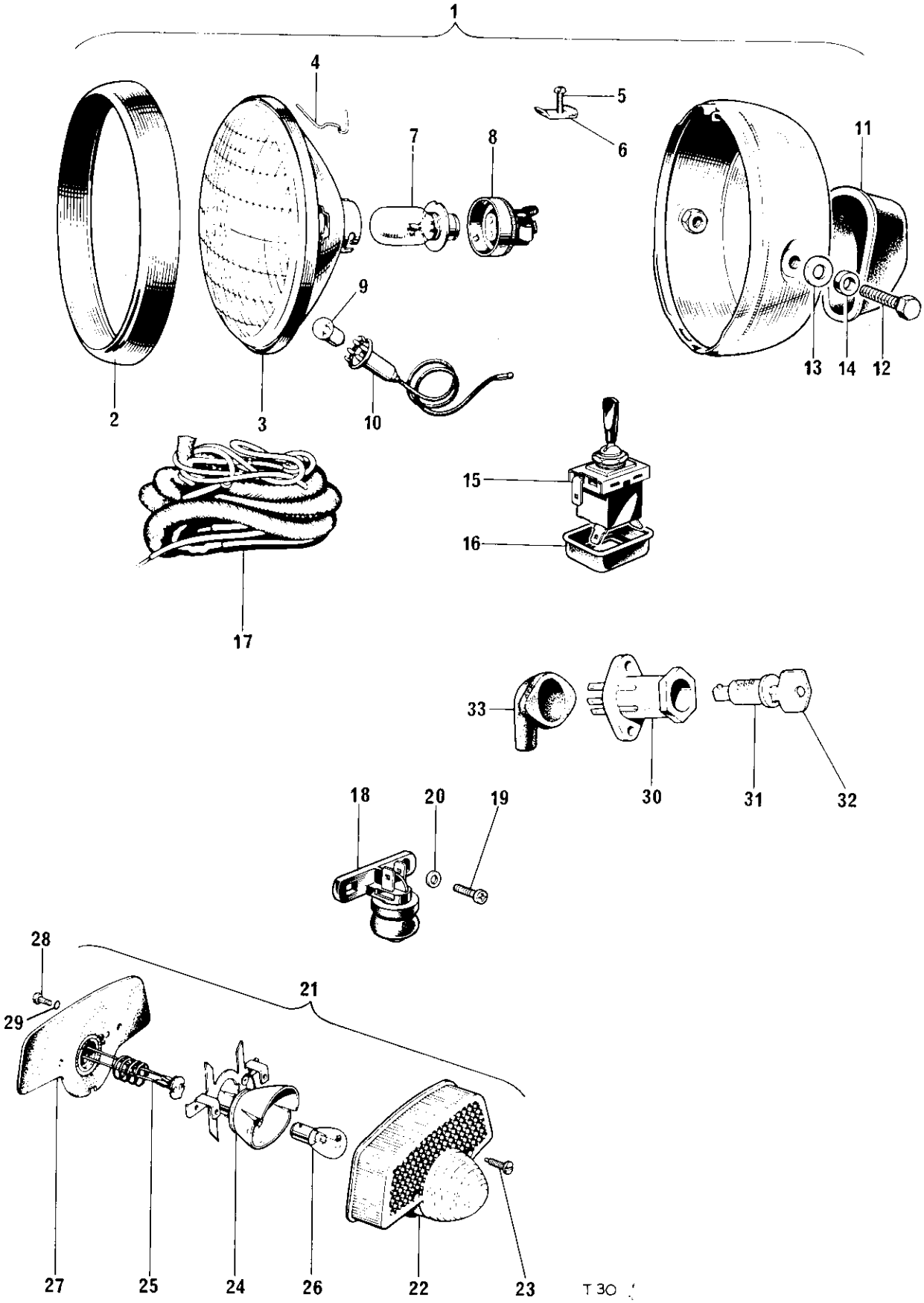

Fig. 35. HEADLAMP, WIRING HARNESS SWITCHES AND TAIL LAMP

Ref. No.	Part No.	DESCRIPTION	QUANTITY	REMARKS

HEADLAMP, WIRING HARNESS, SWITCHES AND TAIL LAMP

1	99–1029	HEADLAMP COMPLETE MCH69 (59892)	1	
2	99–0692	Rim 553248	1	
3	99–0686	Light unit 516798	1	
4	99–0683	Fixing wire 504665	6	
5	144921	Screw		Reference only
6	534296	Plate		Reference only
7	99–0545	Bulb (50/40W. vertical dip pre focus) 446	1	
8	99–1003	Main bulbholder 554602	1	
9	99–0548	Bulb (6W. M.C.C.) 989	1	
10	99–0695	Pilot bulb holder 54573590	1	
11	99–1026	Rubber cover 54524048	1	
12	112201	Bolt		Reference only
13	137498	Plain washer		Reference only
14	H2362	Distance piece	2	
15	99–0563	Lighting switch type 57SA (31788)	1	
16	F9692	Switch rubber cover	1	
17	D2124	Wiring harness 54955732	1	
18	99–1028	Stoplamp switch 118SA (34815)	1	
19	F4715	Screw, switch to engine plate ($\frac{13}{32}$ in. U.H.)	1	
20	E2351	Washer, switch to engine plate	1	
21	99–0597	STOP AND TAIL LAMP, type L679 (53973)	1	
22	99–1046	Lens (54577109)	1	
23	144921	Screw		Reference only
24	54578213	Bulb holder with reflector		Reference only
25	573828	Contact assembly		Reference only
26	99–0542	Bulb (6/21W. offset pin) 380	1	
27	54571677	Gasket		Reference only
28	110714	Screw		Reference only
29	188330	Washer		Reference only
30	99–0558	Ignition switch, type S45 (31899)	1	
31	F6981	IGNITION LOCK C/W KEYS	1	
32	D622	Ignition key (state serial number)	2	
33	H2262	Rubber cover, ignition switch	1	

© HDT 2001

© HDT 2001

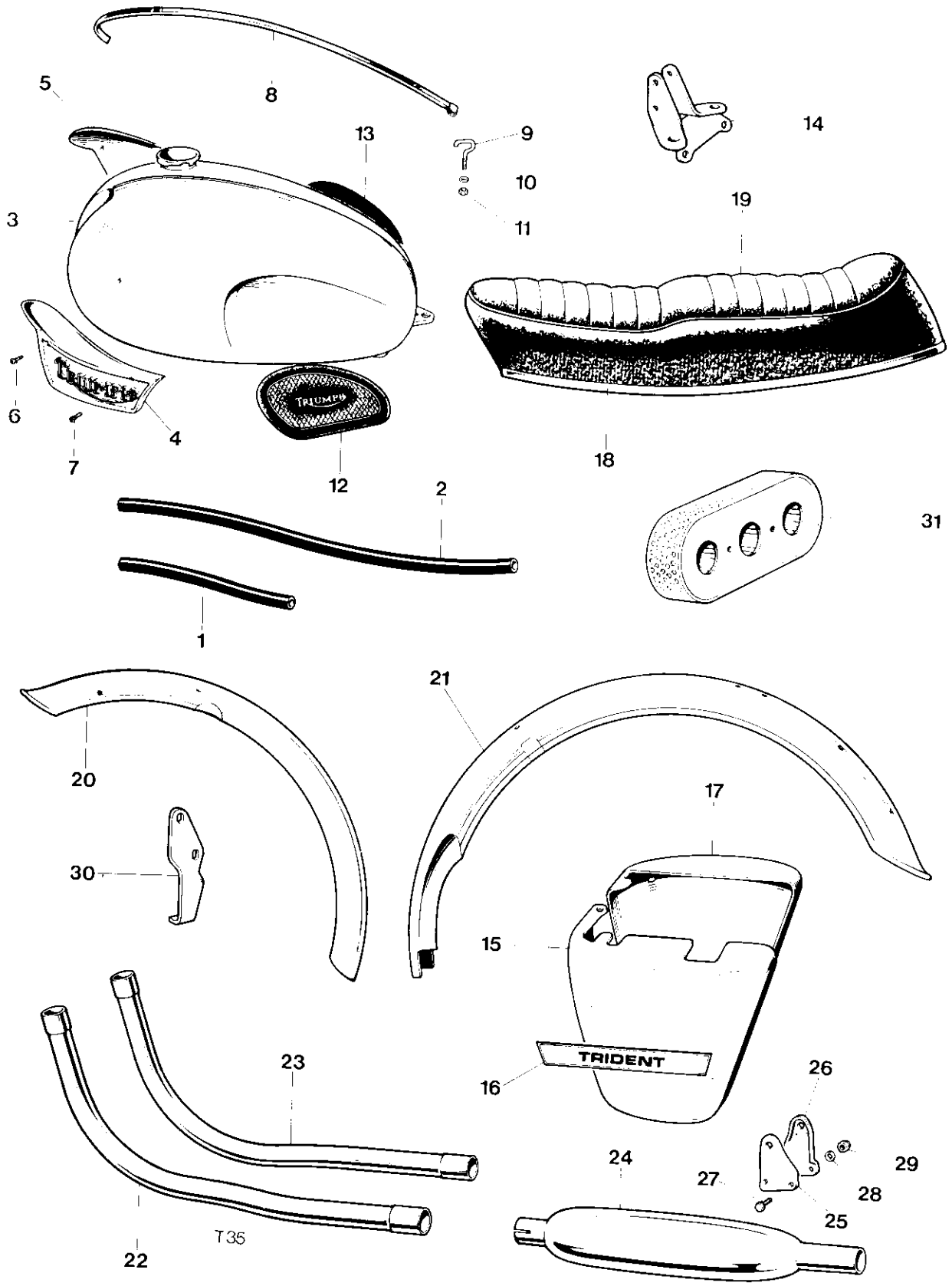

Fig. 36. ITEMS SPECIAL TO NORTH AMERICAN VARIANT

NORTH AMERICAN VARIANT 1970 TRIDENT

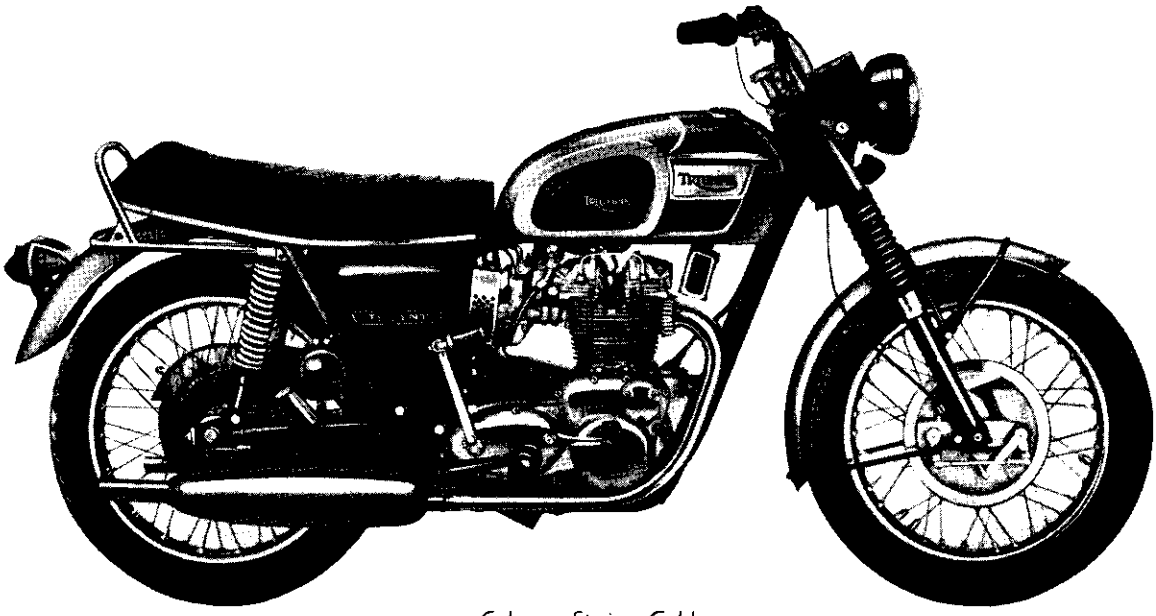

Colour—Spring Gold

For machines as illustrated above, the following parts as in Fig. 36 apply:—

1	E11742	Oil pipe—rocker pipe to oil cooler	1
2	E11743	Oil pipe—coller to oil tank	1
3	F12036	Petrol tank (Spring Gold) 3½ gallon	1
4	F11340	Styling unit D.S.	1
5	F11341	Styling unit T.S.	1
6	F11339	Screw, styling unit, front	2
7	F7888	Screw, styling unit, rear	2
8	F12034	Centre band	1
9	F10008	Hook screw } Centre band	1
10	F4019	Washer } Centre band	1
11	H919	Nut } Centre band	1
12	F8192	Knee grip D.S.	1
13	F8193	Knee grip T.S.	1
14	F12024	Mounting bracket, petrol tank and oil cooler	1
15	F12029	Side panel D.S.	1
16	D2565	Transfer "Trident" D.S.	1
17	F12030	Side panel T.S.	1
Not illus.	D2564	Transfer "Trident" T.S.	1
18	F12039	Trinseat	1
19	F12239	Twinseat cover	1
20	H3882	Front mudguard (Spring Gold)	1
21	F11602	Rear mudguard (Spring Gold)	1
22	E11744	Exhaust pipe D.S.	1
23	E11745	Exhaust pipe T.S.	1
24	E11851	Silencer	2
25	E11374	Bracket, silencer D.S.	1
26	E11375	Bracket, silencer T.S.	1
27	14–0102	Bolt } Silencer to bracket	4
28	D2338	Washer } Silencer to bracket	4
29	14–1201	Nut } Silencer to bracket	4
30	F12033	Stop plate, centre stand	1
31	D2642	Air cleaner surround band	1

© HDT 2001

© HDT 2001

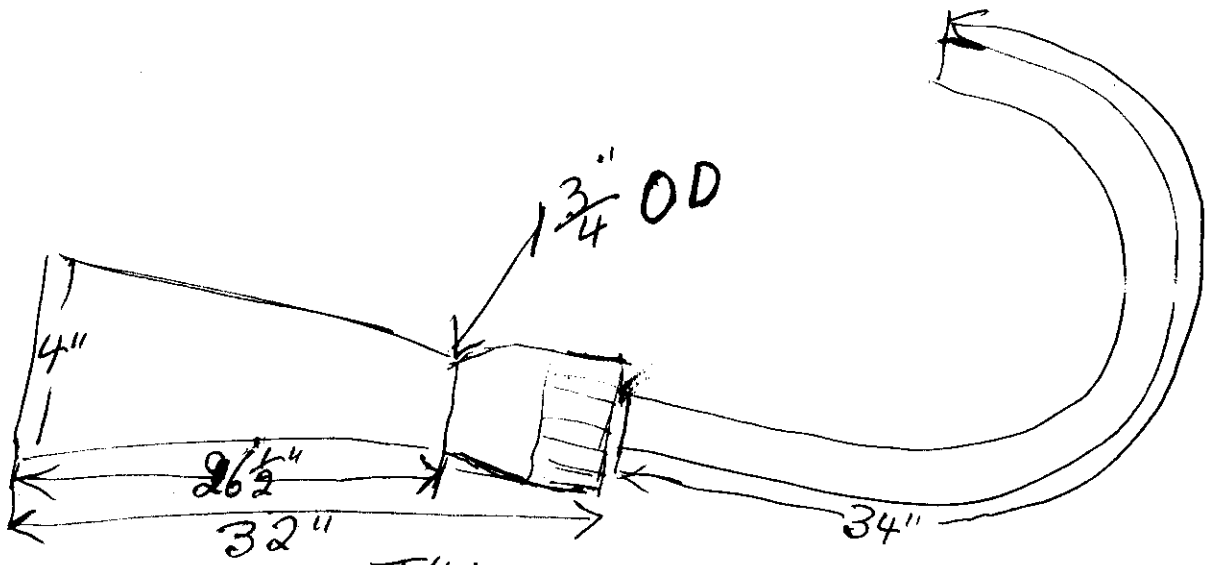

THE DIAM. OF MEG AT END IS NOT IMPORTANT, THE LENGTH OF MEG MUST BE AT LEAST 2/3 OF EXPIPE LENGTH

TRIUMPH

UK AND GENERAL EXPORT SUPPLEMENT TO

REPLACEMENT PARTS CATALOGUE

Trident

TRIUMPH ENGINEERING CO. LTD., MERIDEN WORKS

ALLESLEY · COVENTRY · ENGLAND

© HDT 2001

© HDT 2001

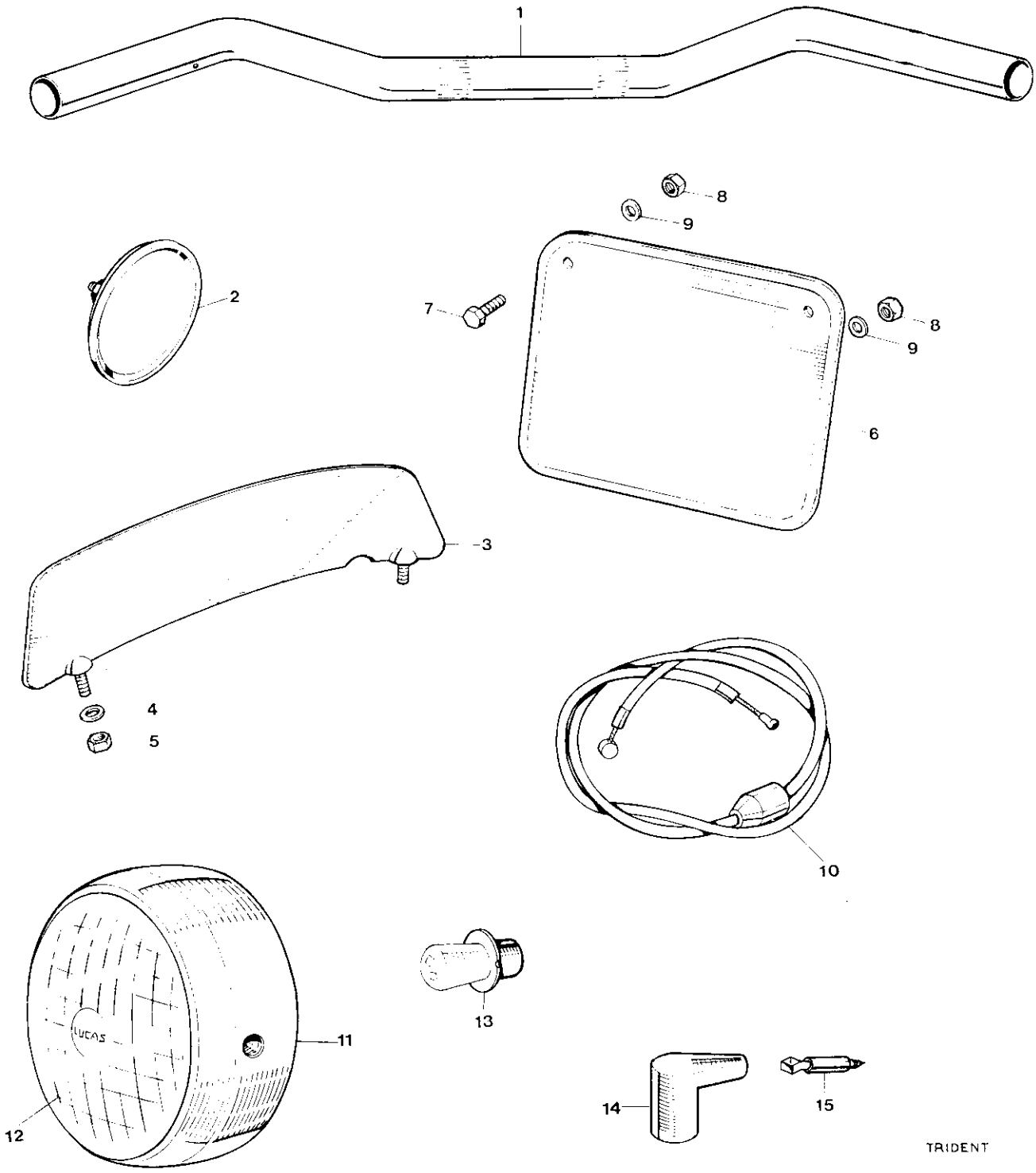

TRIDENT

This supplement should be read in conjunction with the TRIDENT REPLACEMENT PARTS CATALOGUE which, with the exception of those parts listed below, covers 1969 UNITED KINGDOM and GENERAL EXPORT models.

Ref. No.	*Part No.*	*DESCRIPTION*	*QUANTITY*
1	H1871	Handlebar	1
2	D261	Licence holder	1
3	H3873	Front number plate	1
4	F9020	Spring Washer	2
5	F879	Nut	2
6	F11555	Rear number plate	1
7	14-0604	Top fixing bolt	2
8	14-1301	Nut	3
9	S25-1	Washer	3
10	D2077	Front brake cable	1
11	D1944	†Headlamp (59893) E.F.	Alternative
11	D1945	Headlamp (59894) European	Alternative
12	D2188	Light unit only, West Germany and Italy	Alternative
13	D2189	Bulb (370) 45/45W West Germany and Italy	Alternative
14	D2196	Spark plug cover (Champion WC187)	1
15	D2197	Suppressor (Champion X187)	3

† Note that UK. models continue to use listed 99-1029 Headlamp.

© HDT 2001

Printed in England by Warwick Printing Co. Ltd. Warwick